EPSON

Watch Movement Specification and Drawing

SOLAR SERIES

Cal. AS01A

Movement Size

6 3/4 × 8'''

Casing Diameter

15.3 × 17.8 mm

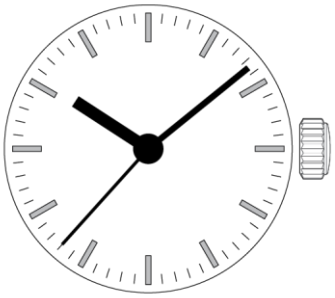

Height

3.45mm

Running Time

Approx. 4 months

Date: 21/May/'21

Cal. AS01A

Items	Rev.	Page
Features	01	1
Specifications	02	2
Appearance	02	3
Casing	01	4
Hand fitting	03	5
Hand setting stem	02	6
Dial-01	02	7-01
Dial-02	02	7-02
Dial-03	02	7-03
Casing ring	02	8
Solar cell unit-01	01	9-01
Solar cell unit-02	01	9-02
Solar cell unit-03	01	9-03
Attention-01	01	10-01
Attention-02	02	10-02
Attention-03	01	10-03

Cal. AS01A	Features	Date : 24/Apr./'15 Rev. : 01

1.Solar-powered watch

This watch is a solar-powered watch containing a solar cell underneath the dial to convert any form of light into " electrical energy" and store the power in a secondary battery.

2. Eliminating the need for battery replacement

Unlike conventional quartz watches, this watch does not use a silver oxide battery, thus eliminating the need for battery replacement.

3. You can use the dial which light transmittance is more than 30%

It is possible to assemble the dial which transmits light on the solar cell.
It enabled to cover the solar cell color, and you can design variety colors of dials.

4. Running time

Expected running time from full charge to stoppage will be around 4 months.

5. Power depletion warning function

The two-second intervals movement of the second hand is a signal of energy depletion.
The watch continuous running time after two-second intervals movement is approximately 1 day.

6. Structure of the separated parts

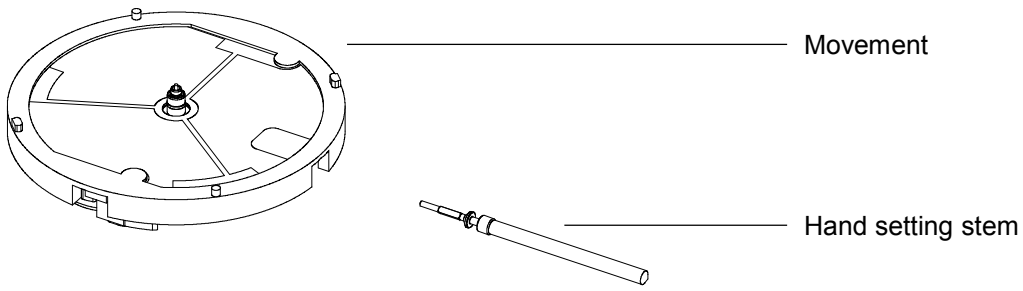

Cal. AS01A	Specifications	Date : 21/May/'21 Rev. : 02

Solar Quartz 6 3/4 × 8''' Movement / Three Hands (H/M/S)

1. MOVEMENT DIMENSIONS

Outside diameter	15.30mm(3-9H) × 18.20mm(12-6H)
Casing diameter	15.30mm(3-9H) × 17.80mm(12-6H)
Total height	3.05mm (Including solar cell : 3.45mm)

2. TIME STANDARD

Type of quartz oscillator	Tuning fork
Frequency of quartz oscillator	32,768 Hz
Accuracy	±20 seconds per month (on wrist)
Operating temperature range	−5℃ to +50℃
Regulation device	Nil (Pre-adjusted)

3. INDICATOR / FUNCTIONS

3 Hands	Hour / Minute / Second	
Reset switch		
Power depletion warning function		
(Second hand moves at 2-second intervals when voltage is 1.15V)		
Running time	Approx. 4 months (After fully charged)	
Setting mechanism	Crown at normal position	: Free
	Crown pulled out 1st click	: Time setting / Reset

4. FEATURES

Jewels	0 Jewels	
Anti-magnetism	Over 1600A/m (Direct current magnetic field)	
Driving current consumption	Approx. 0.93μA (1.4V)	
Operation stopping voltage	1.0 V	
Solar cell type	Amorphous silicon solar cell	
Maximum unbalance of hands	Second hand	: 0.06μN･m
	Minute hand	: 0.6μN･m
	Hour hand	: 0.5μN･m
Moment of inertia	Second hand	: less than 0.11 μg･m²

5. SECONDARY BATTERY (Installed)

Type	Lithium metal batteries
Size	φ6.8mm × t 2.15mm
Nominal voltage	1.5 V
Capacity	2.5 mAh

6. SEPARATED PARTS (Parts code)

Hand setting stem	0354788

7. TEST OF ACCURACY

Equipment to be used	SEIKO quartz tester QT-99, Greiner quartz timer-C , Witschi Q-tester 4000
Duration of measurement	10 seconds
Microphone to be used	Electromagnetic detection type

All specifications are subject to change without notice.

Cal. AS01A	Appearance	Date:27/Mar./'20
		Rev.:02

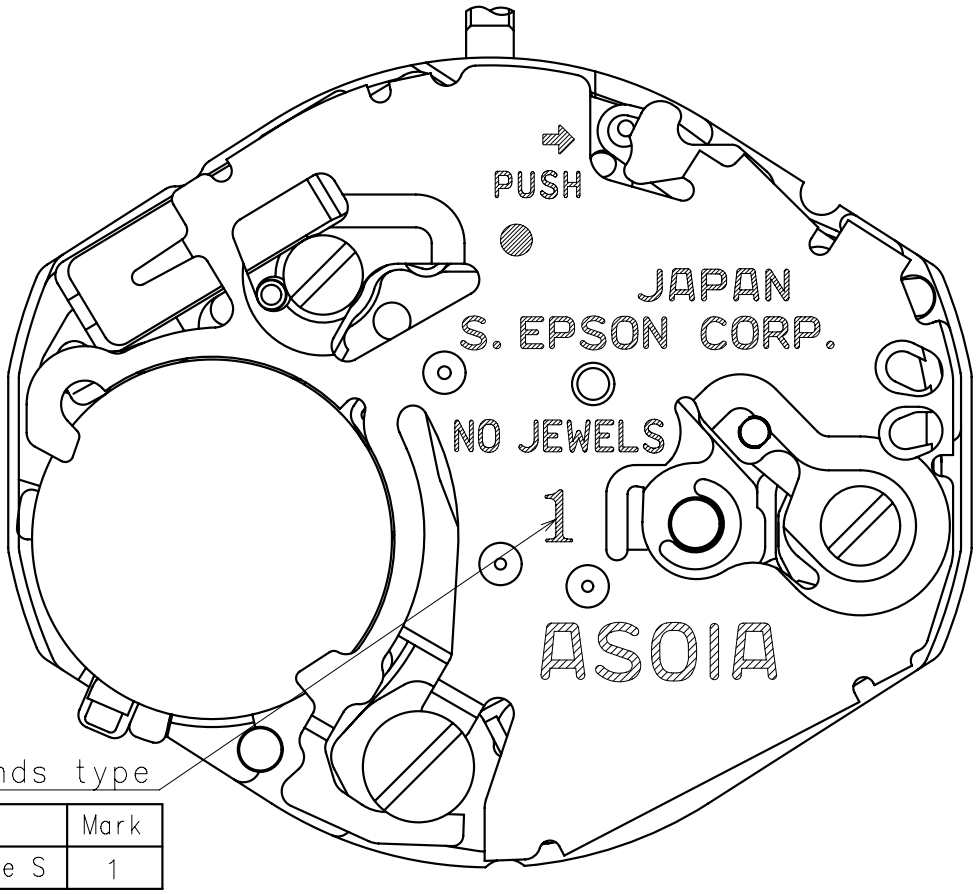

Hands type

	Mark
Type S	1

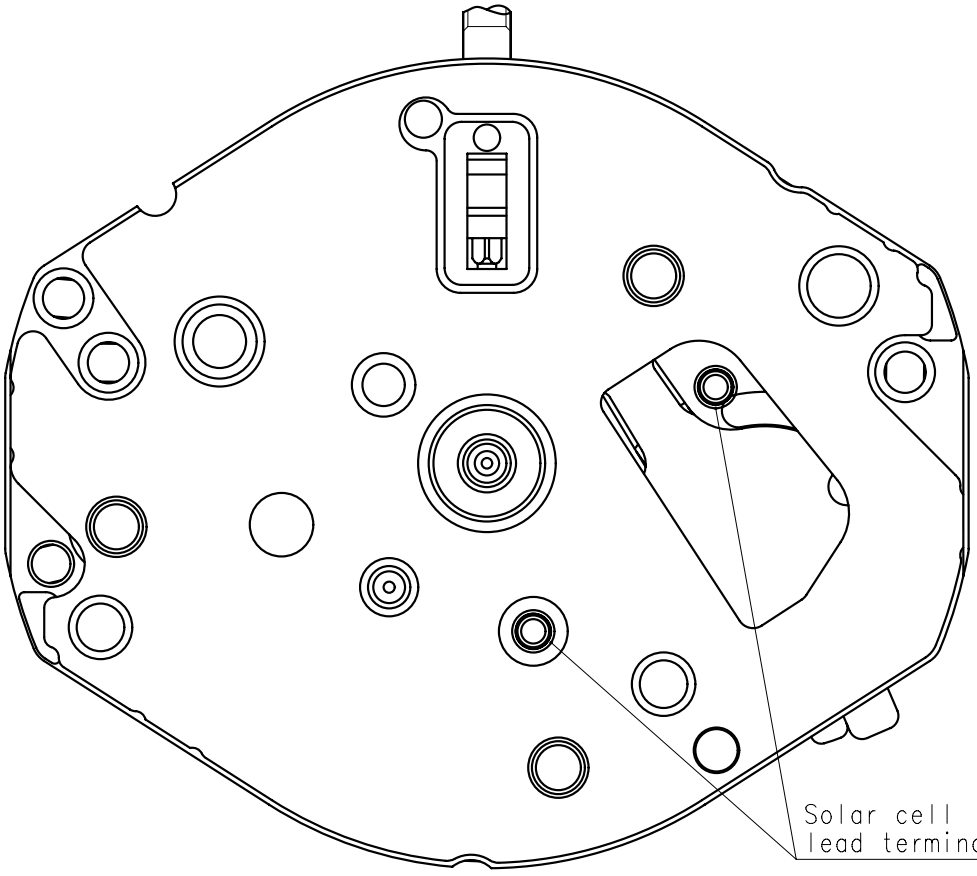

Cal. AS01A	Casing	Date:24/Apr./'15
		Rev.:01

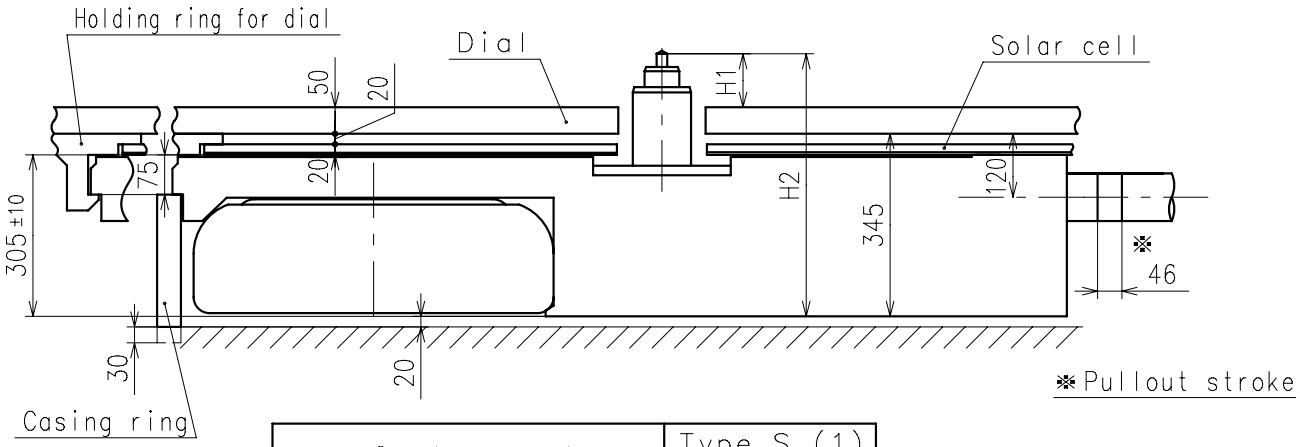

Center post		Type S (1) AS01A**
Maximum height from dial	H1	101
Total height including movement	H2	496

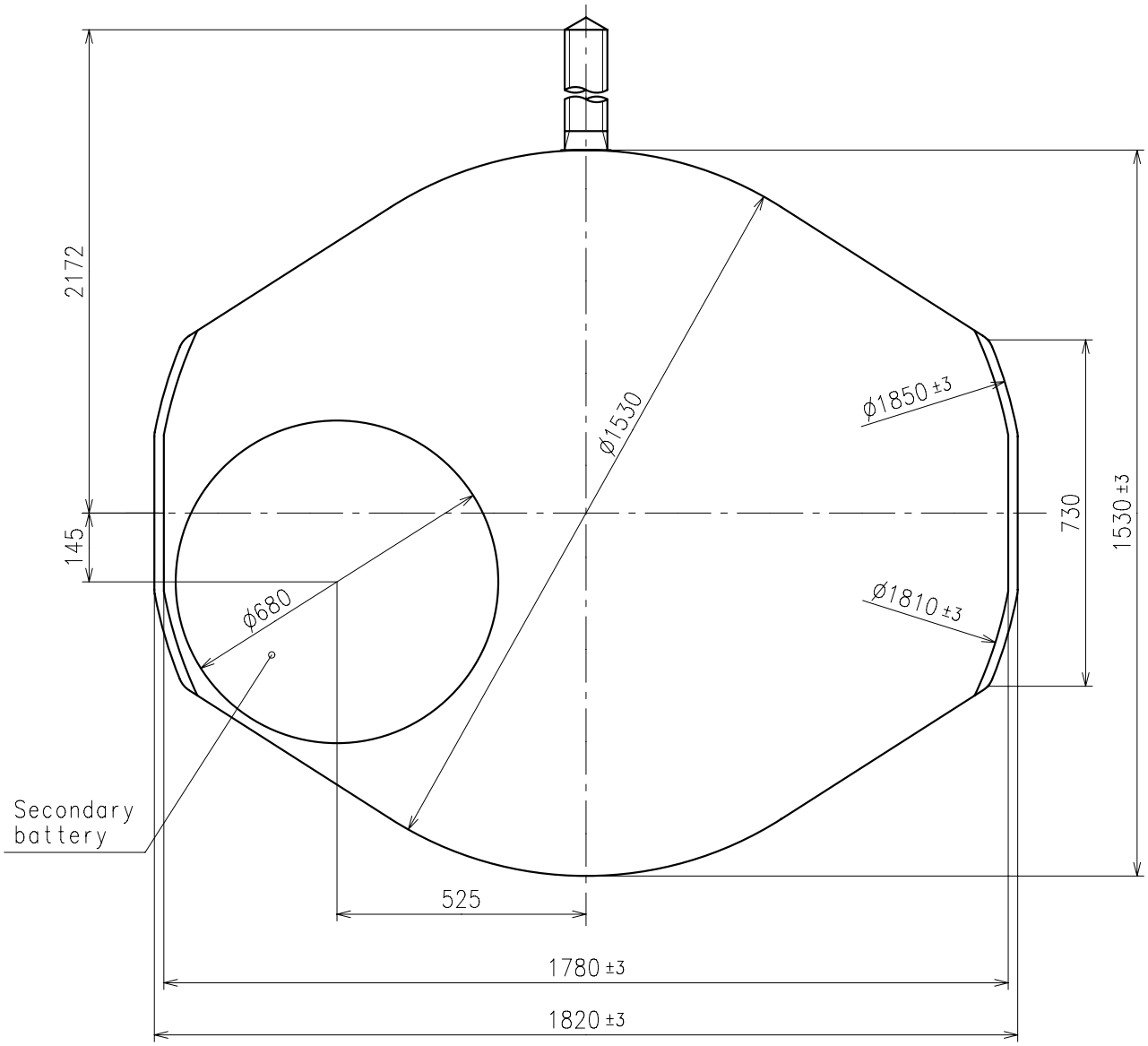

Unit : 1=1/100mm

Cal. AS01A	Hand fitting	Date:30/Jul./'19 Rev.:03

※ Unbalance
- Hour hand ≦ 0.5μ N・m (50μ g・m)
- Minute hand ≦ 0.6μ N・m (60μ g・m)
- Second hand ≦ 0.06μ N・m(6μ g・m)

※ Moment of inertia
- Second hand ≦ 0.11μ g・m²

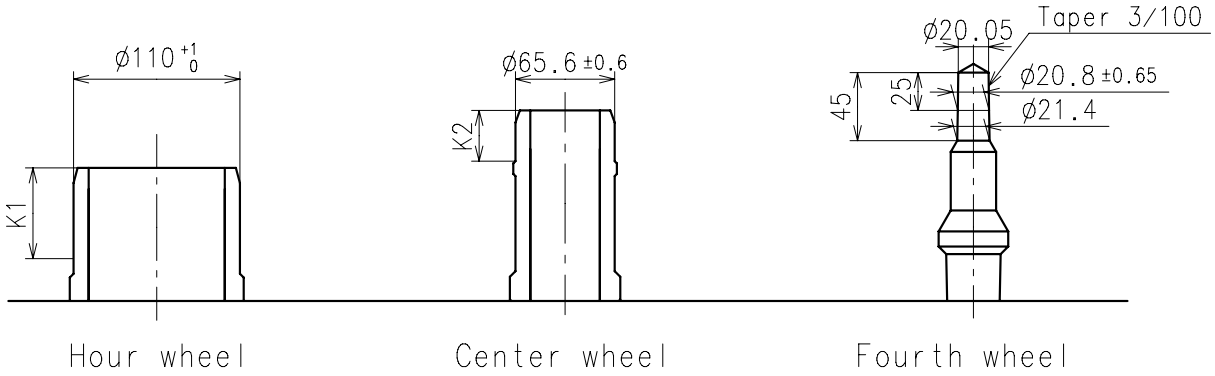

	Parts No.			Dimension	
	Hour wheel	Center wheel	Fourth wheel	K1	K2
Type S(1) AS01A**	0271764	0221764	0241764	52	33.5

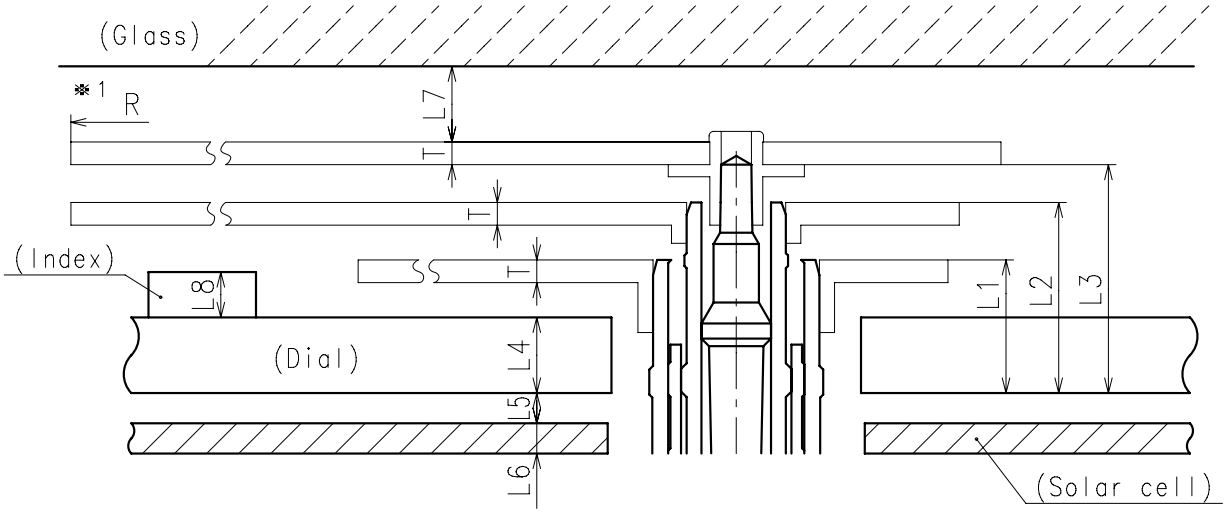

	L1	L2	L3	L4	L5	L6	L7	L8	T	※1 R
Type S(1) AS01A**	88	126	151	50	20	20	MIN: 50	MAX: 30	15	MAX: 1250

※1:It is the size taken into consideration for hands attachment.
Please observe some standard value specified in unbalance and moment of inertia when using long hands.

Unit : 1=1/100mm

Cal. AS01A	Hand setting stem	Date:27/Dec./'16 Rev.:02

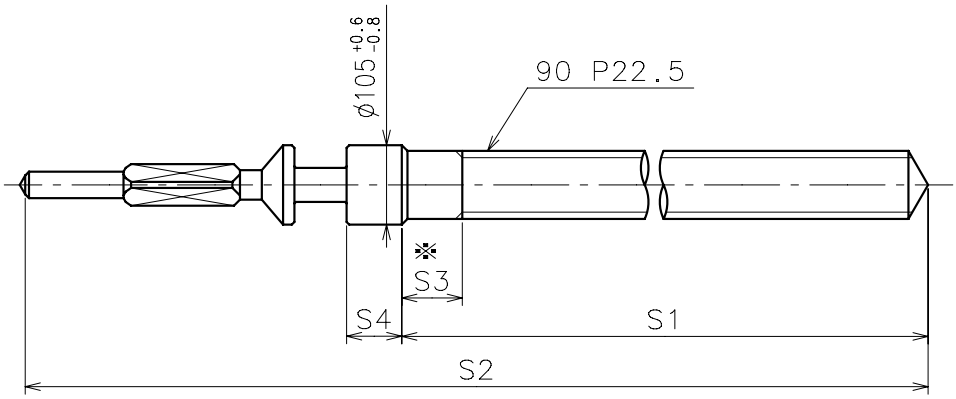

※ Not threaded

	Part No.	S1	S2	※ S3	S4
Standard	0354788	1473	1971	80	73

Material : Steel

Hardness : Vickers 530±50

Unit : 1=1/100mm

Cal. AS01A	Dial-01	Date:24/Apr./'15
		Rev.:02

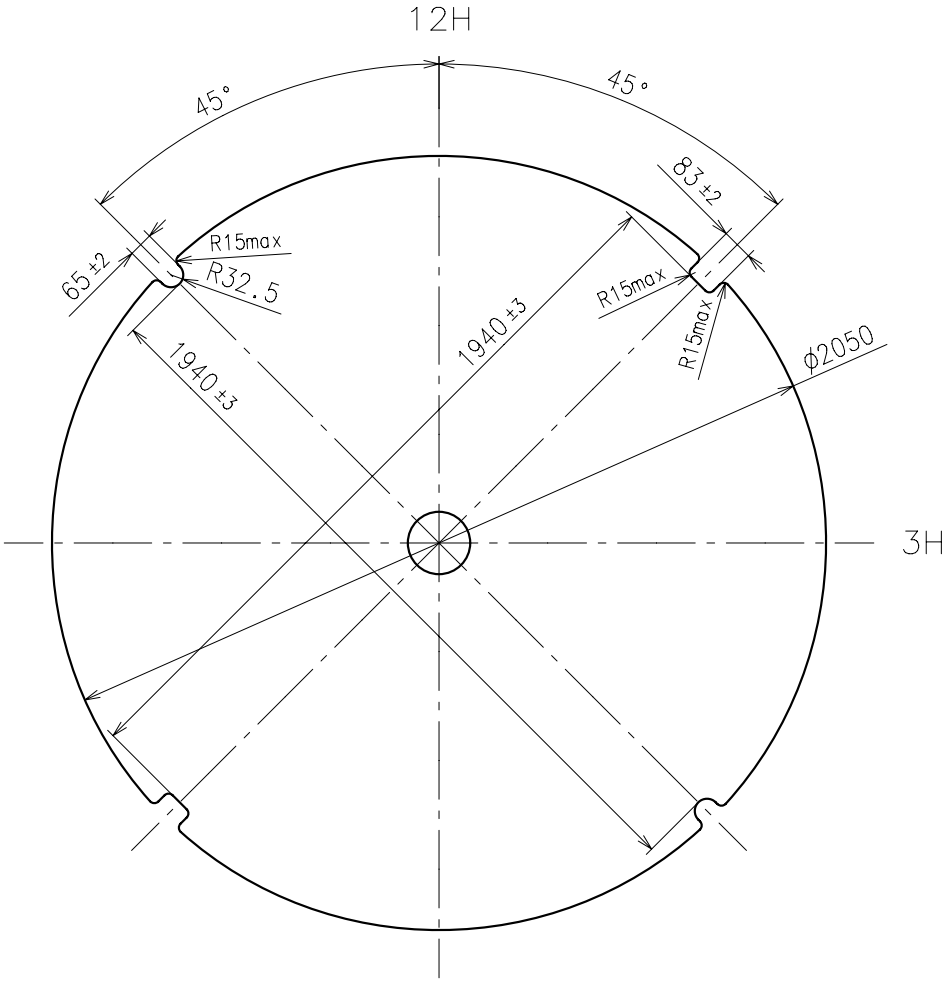

Case body inside diameter:ø2080

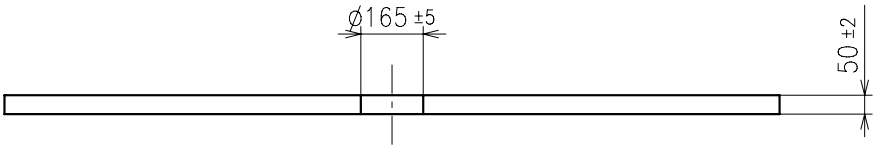

[Attention]
Each elements of solar cell must be kept the transparency rate of the dial more than 30%.
Refer to the Fig.[1] or [Solar cell unit-01] page instruction as to the shape of solar cell.

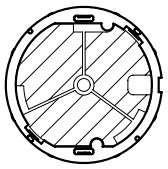

Fig.[1] elements of solar cell

Unit : 1=1/100mm

Cal. AS01A	Dial-02	Date:24/Apr./'15
		Rev.:02

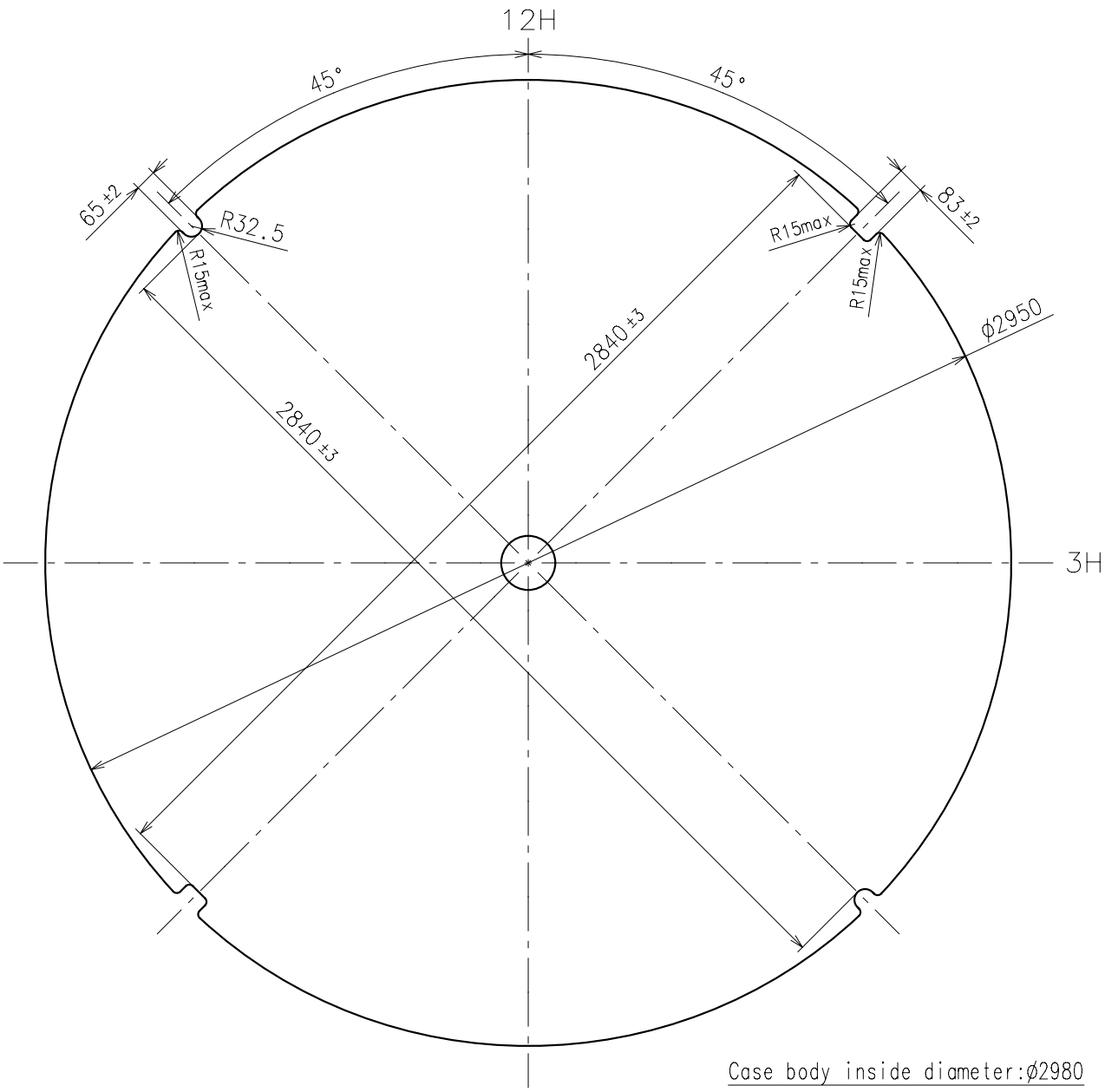

Case body inside diameter:ø2980

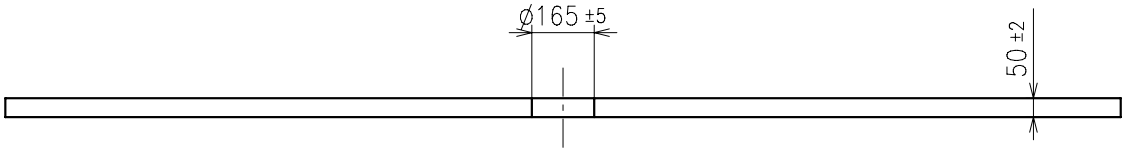

[Attention]
Each elements of solar cell must be kept the transparency rate of the dial more than 30%.
Refer to the Fig.[1] or [Solar cell unit-02] page instruction as to the shape of solar cell.

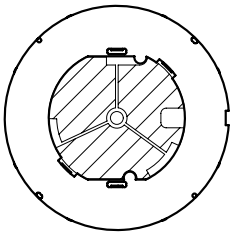

Fig.[1] elements of solar cell

Unit : 1=1/100mm

Cal. AS01A	Dial-03	Date:24/Apr./'15 Rev.:02

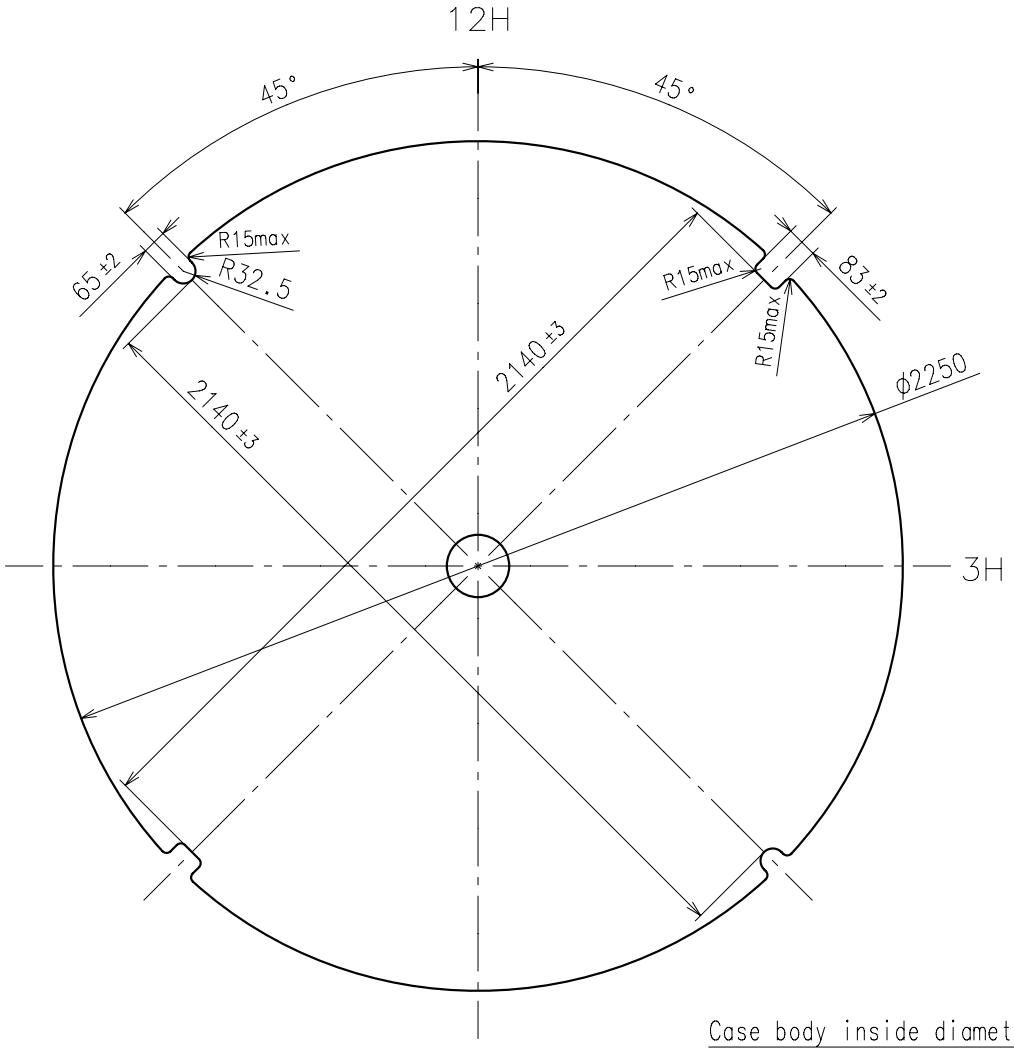

Case body inside diameter:φ2280

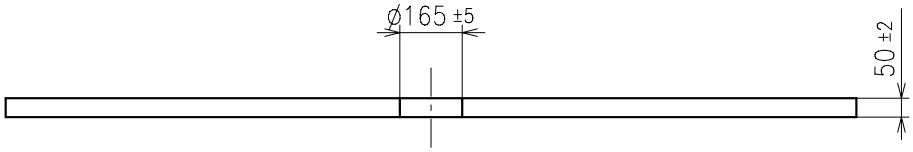

[Attention]
Each elements of solar cell must be kept the transparency rate of the dial more than 30%.
Refer to the Fig.[1] or [Solar cell unit-03] page instruction as to the shape of solar cell.

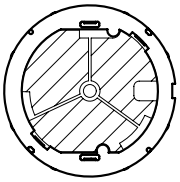

Fig.[1] elements of solar cell

Unit : 1=1/100mm

Cal. AS01A	Casing ring	Date:24/Apr./'15 Rev.:02

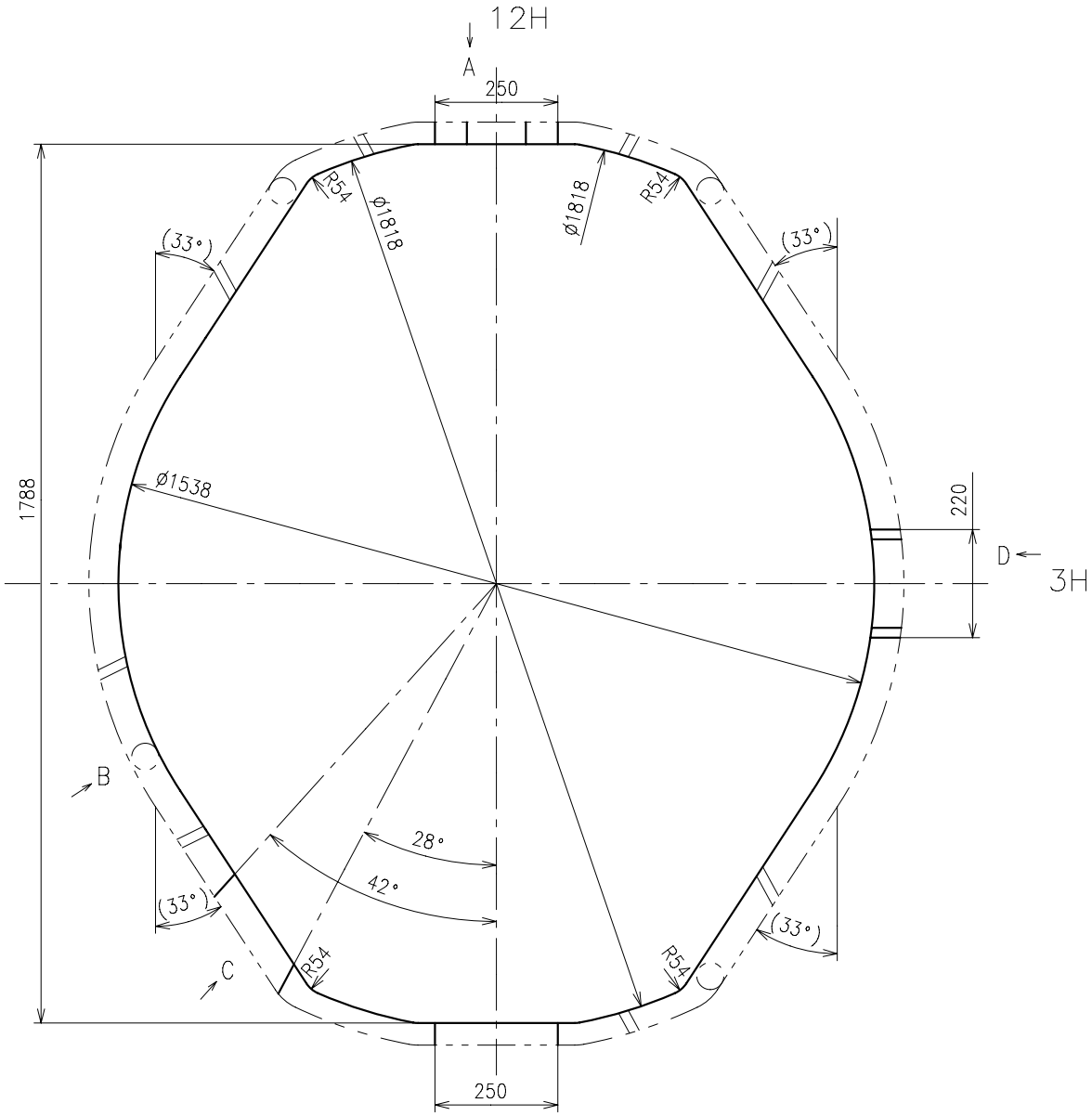

A view

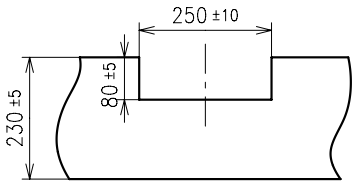

B view

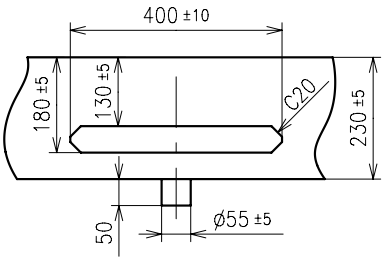

C view

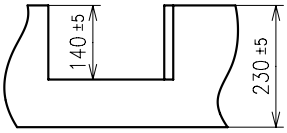

D view

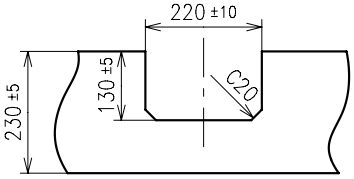

Unit : 1=1/100mm

Cal. AS01A	Solar cell unit-01	Date:24/Apr./'15
		Rev.:01

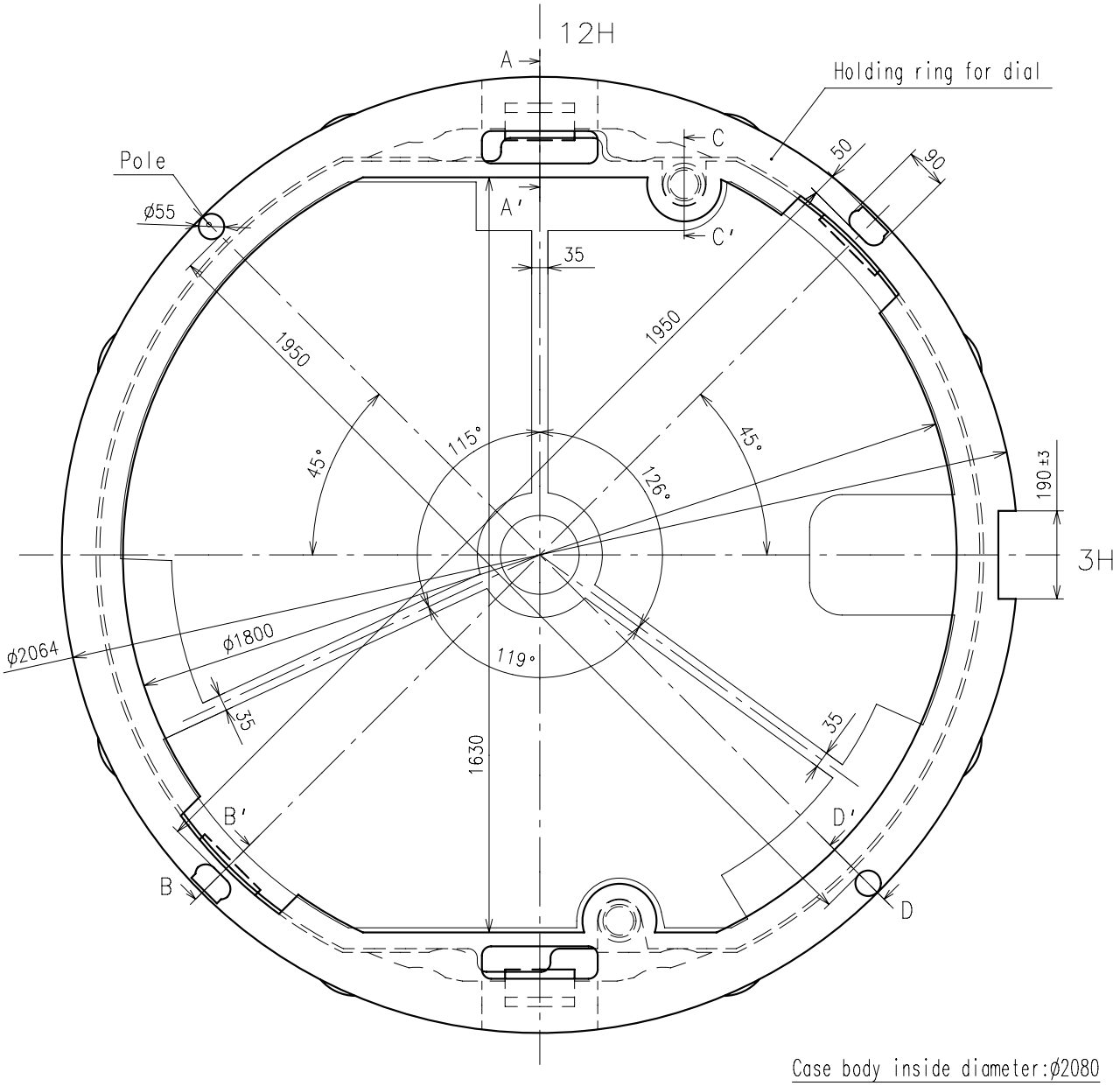

Case body inside diameter:ø2080

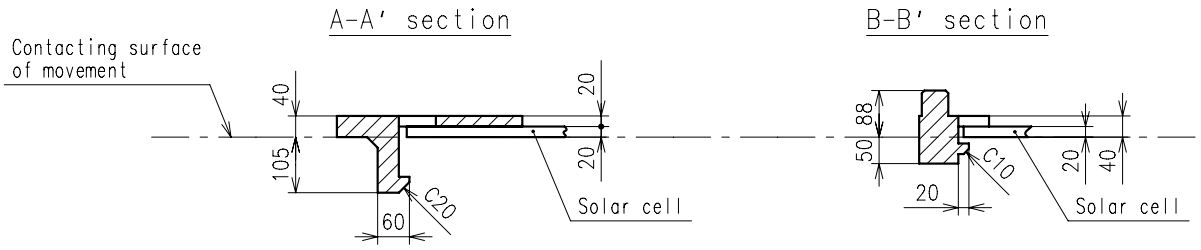

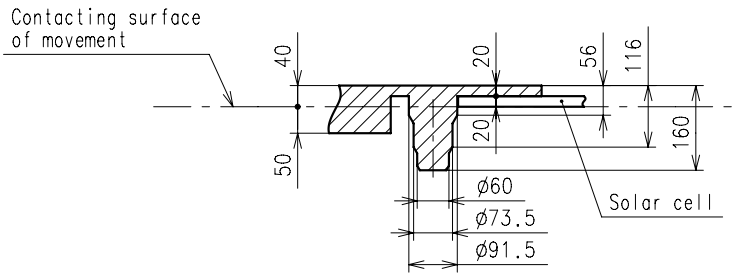

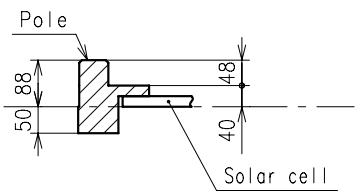

Unit : 1=1/100mm

Cal. AS01A	Solar cell unit-02	Date:24/Apr./'15 Rev.:01

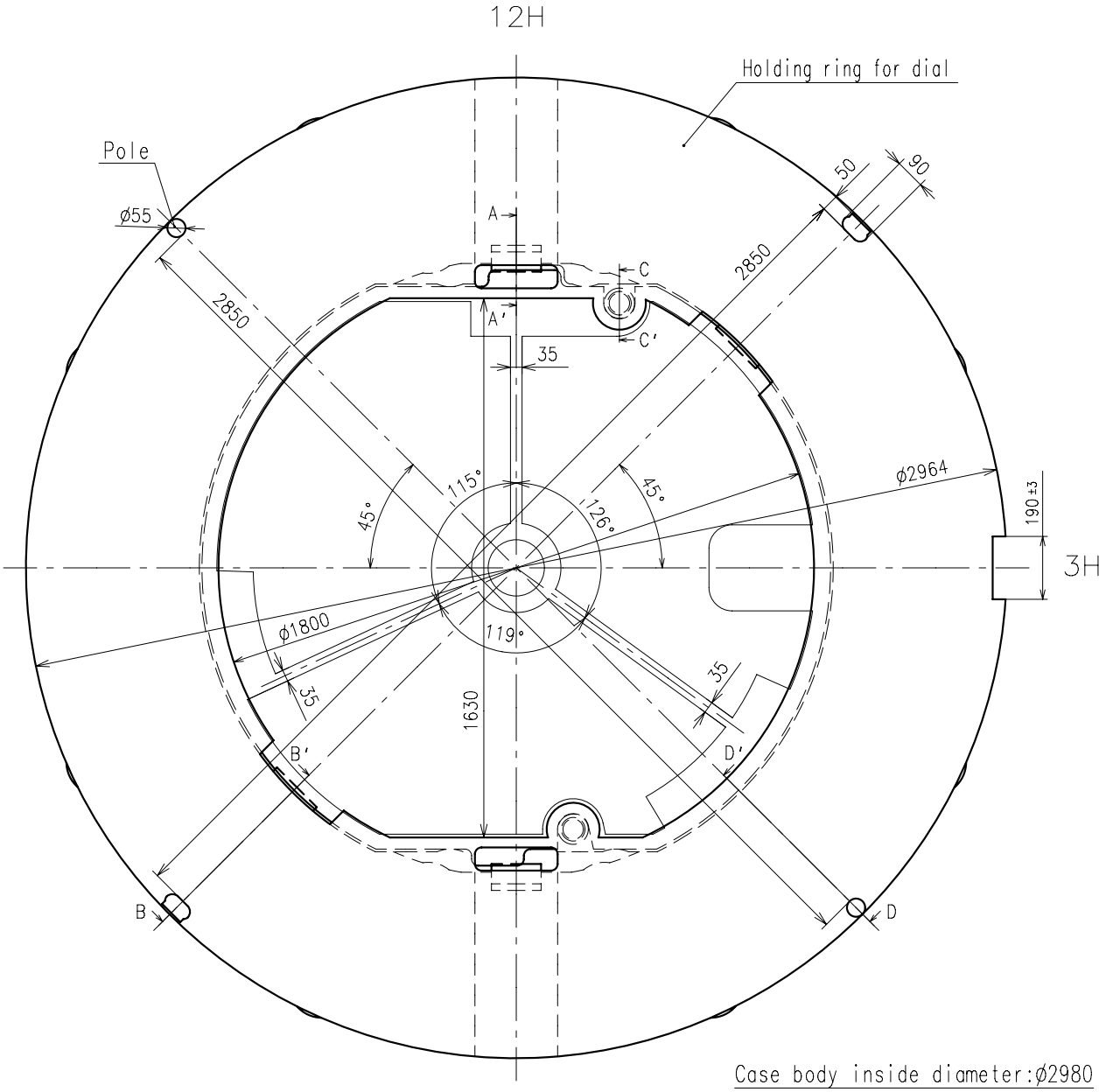

A-A' section

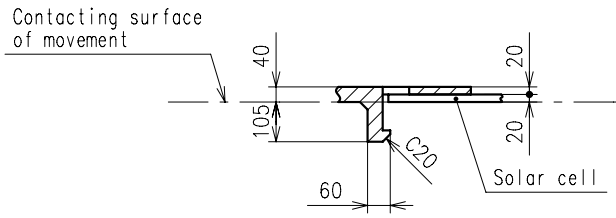

B-B' section

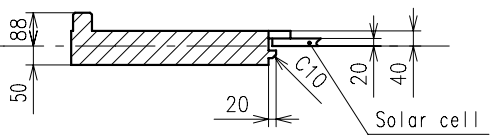

C-C' section

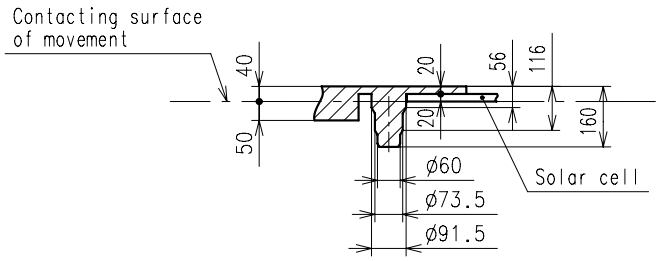

D-D' section

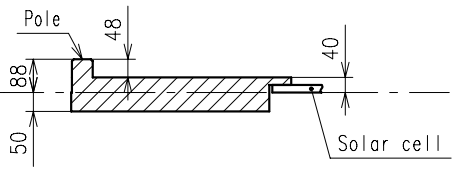

Unit : 1=1/100mm

Cal. AS01A	Solar cell unit-03	Date:24/Apr./'15
		Rev.:01

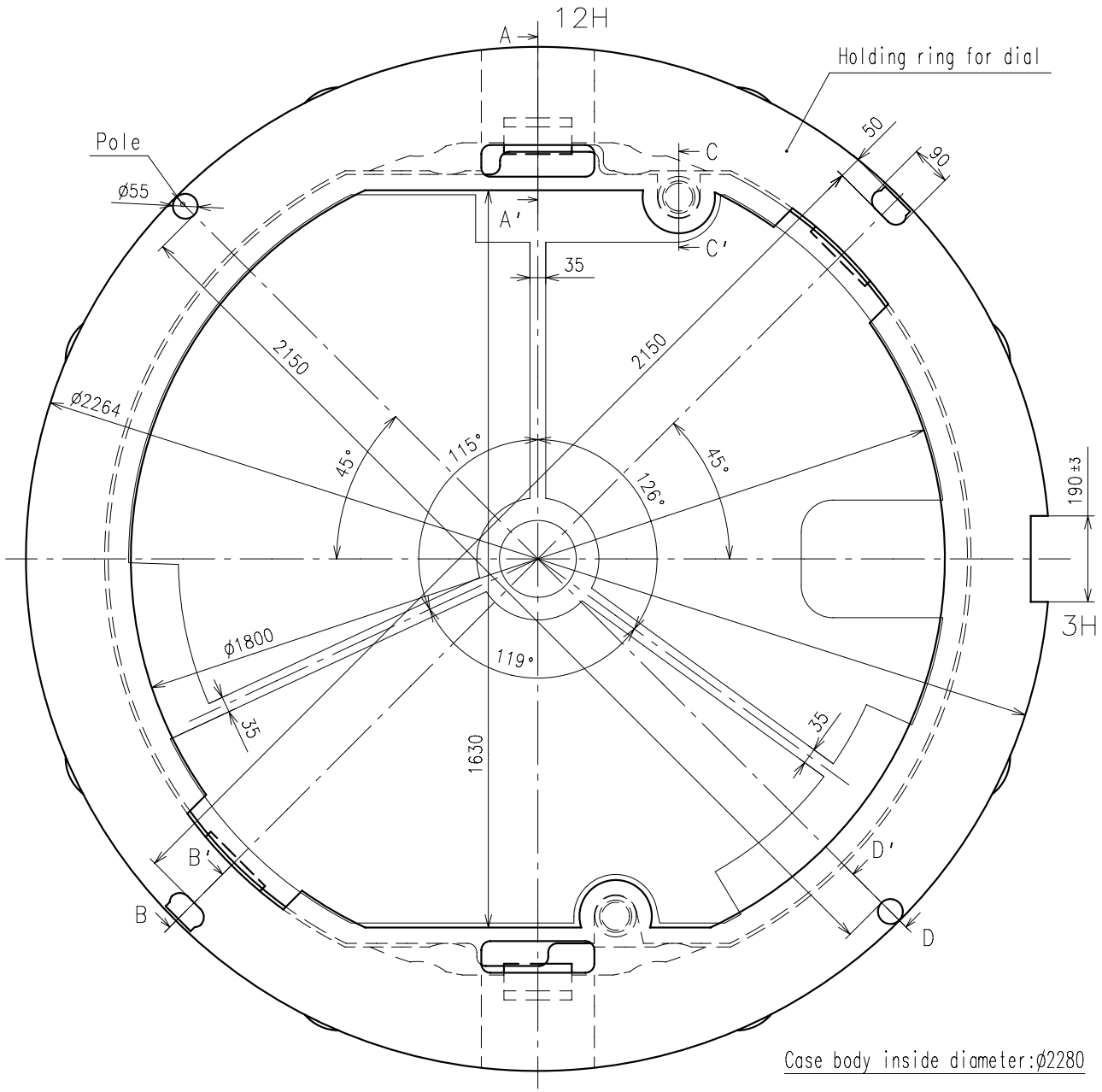

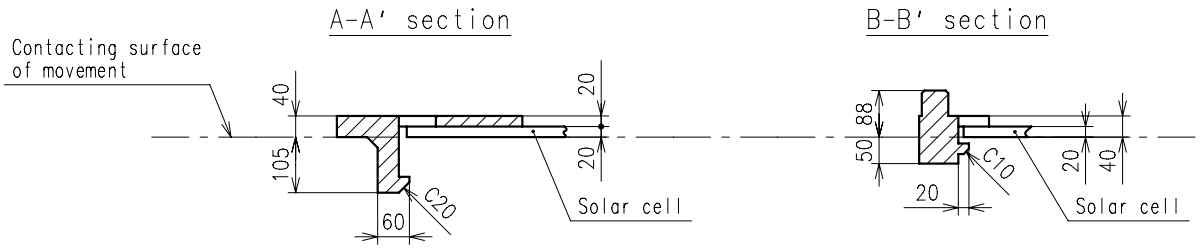

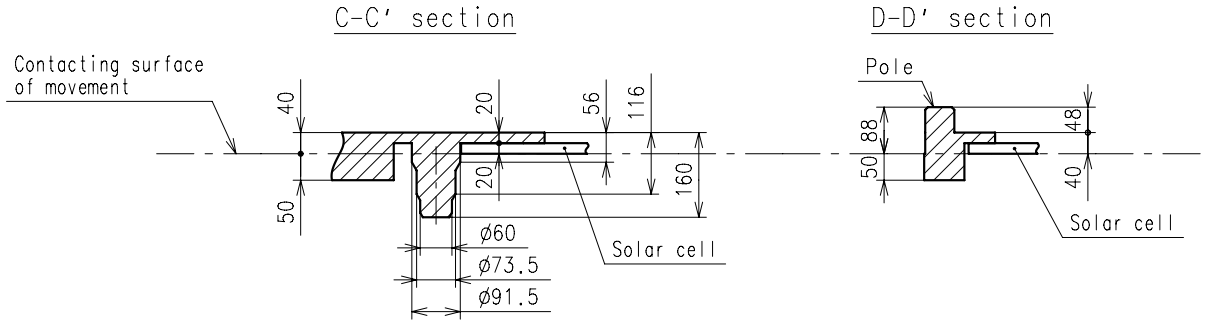

Unit : 1=1/100mm

Cal. AS01A	Attention-01	Date : 24/Apr./'15 Rev. : 01

1. How to remove the setting stem

When removing the setting stem, put the setting stem at normal position and push the "setting lever" by tweezers. (Refer to the Fig.[0].)

The "setting lever" can not be push if the setting stem is not at normal position.

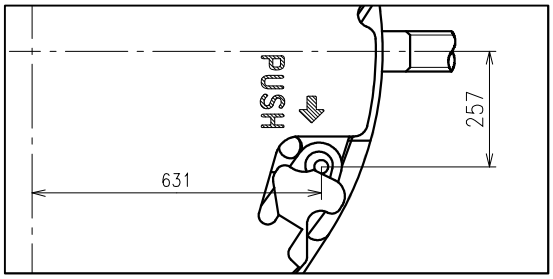

Fig.[0]

2. Attention for solar cell unit

Pay attention not to touch and scratch the surface of the solar cell.

3. Dial transparency rate

Keep the transparency rate of the dial more than 30%.

(Effective aperture is ϕ19mm)

Each elements of solar cell must be kept the transparency rate.

4. The guideline of charging time is as in below

(Dial transparency rate = 30%)

Illumination (Lx)	Source of light	Environment	A (Approx. Hours)	B (Approx. Hours)	C (Approx. Minutes)
700	A fluorescent lamp	Inside the office	—	35	100
3,000		30W 20cm	60	4	25
10,000	Sun light	Cloudy	20	1.5	8
100,000		Fine weather	5	15 minutes	2

Condition A : Time required for full charge

Condition B : Time required for steady operation

Condition C : Time to charge 1 day of power

5. Caution

When charging the watch, do not place it too close to fluorescent lamp or other light sources as the watch temperature will become extremely high, causing damage to the parts inside the watch.

6. Attention for the secondary battery unit

Please set the exclusive secondary battery unit.
(The secondary battery is Lithium metal batteries without any environmentally harmful substances.)
If the silver oxide battery is accidentally set and charged, there is a possibility of battery explosion.
To prevent from the battery explosion, it is adopted safety structure not to charge the silver oxide battery even if it is accidentally set.

When the secondary battery is assembled, please match the phase in accordance with illustration and push the battery vertical direction. (Refer to the Fig.[1], [2] in below.)
Please pay attention not to bend the solar cell lead terminal.

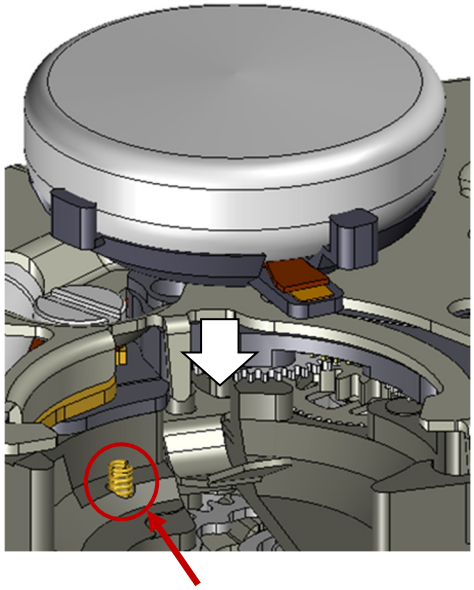

Fig.[1]

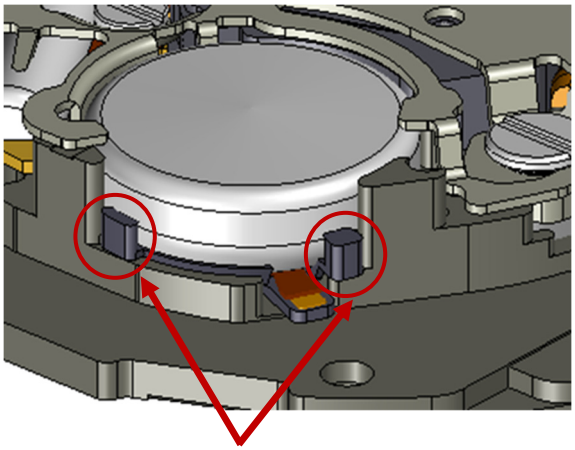

Fig.[2]

When the secondary battery is disassembled, please broaden the spring of circuit block cover toward the (⇒) direction and remove the battery in accordance with illustration. (Refer to the Fig.[3] in below.)

Please refrain from touching the diode element on the back side of the secondary battery.
(Refer to the Fig.[4] in below.)

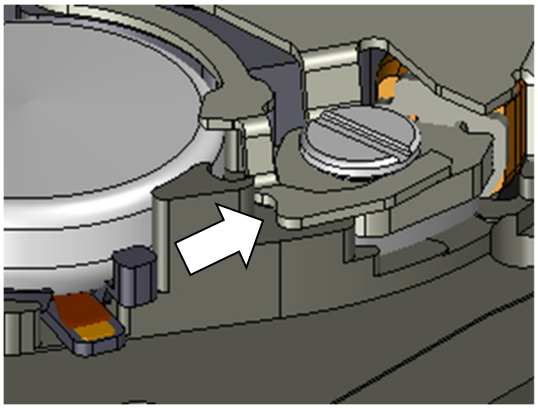

Fig.[3]

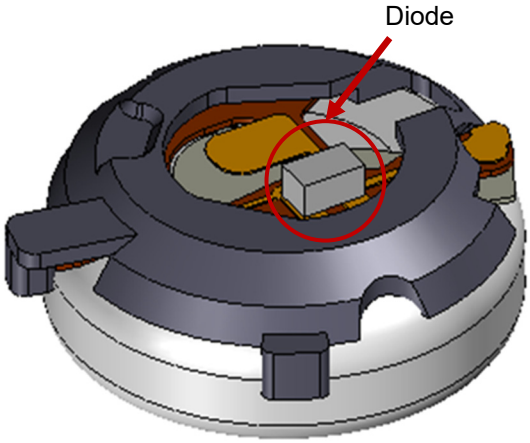

Fig.[4]

7.Attention for hands disassemble

When the hand is disassembled, please be sure to hold the dial.
If the hand is disassembled without holding the dial, it may have a possibility to break the movement.

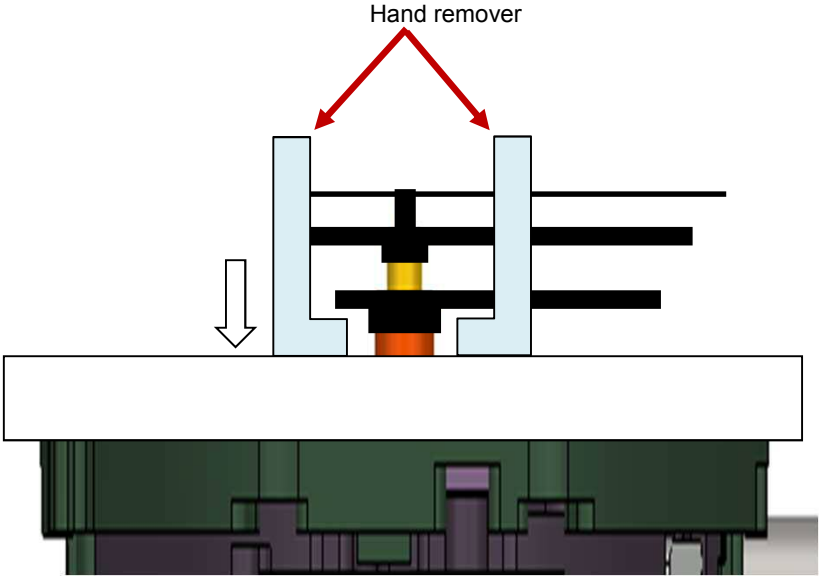

8. How to set the dial
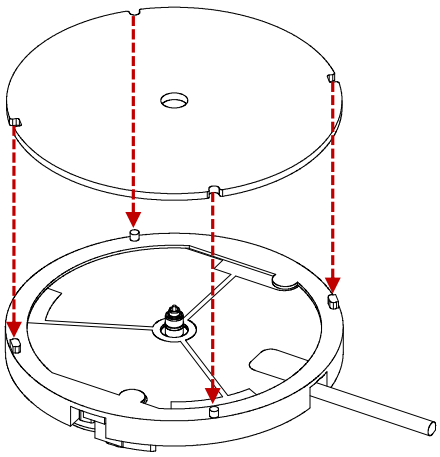
The dial is held by the four guide poles on the solar cell unit.