EPSON

Watch Movement Specification and Drawing

SOLAR SERIES

Cal. VS75B

Movement Size

12'''

Casing Diameter

Ø 27.0mm

Height

4.40mm

Running Time

Approx. 6 months

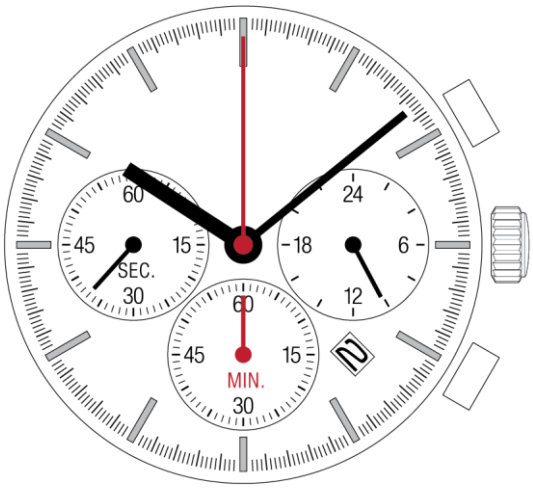

Date: 1/Dec./'23

Cal. VS75B

Items	Rev.	Page
Features	01	1
Specifications	02	2
Appearance	00	3
Casing	00	4
Hand fitting	01	5
Hand setting stem	00	6
Dial	01	7
Solar cell unit	01	8
Attention-01	03	9-01
Attention-02	01	9-02
Attention-03	01	9-03
Operation-01	00	10-01
Operation-02	00	10-02

Cal. VS75B	Features	Date : 4/Aug./'23 Rev. : 01

1.Solar-powered watch

This watch is a solar-powered watch containing a solar cell underneath the dial to convert any form of light into " electrical energy" and store the power in a secondary battery.

2. Eliminating the need for battery replacement

Unlike conventional quartz watches, this watch does not use a silver oxide battery, thus eliminating the need for battery replacement.

3. You can use the dial which light transmittance is more than 20%

It is possible to assemble the dial which transmits light on the solar cell.
It enabled to cover the solar cell color, and you can design variety colors of dials.

4. Running time

Expected running time from full charge to stoppage will be around 6 months.

5. Power depletion warning function

The two-second intervals movement of the second hand is a signal of energy depletion.
The watch continuous running time after two-second intervals movement is approximately 1 week.

6. Over charge prevent function is equipped

If the secondary battery is charged more than predetermined voltage, over charge prevent function is operated to prevent the secondary battery deterioration and breakage.

7. Structure of the separated parts

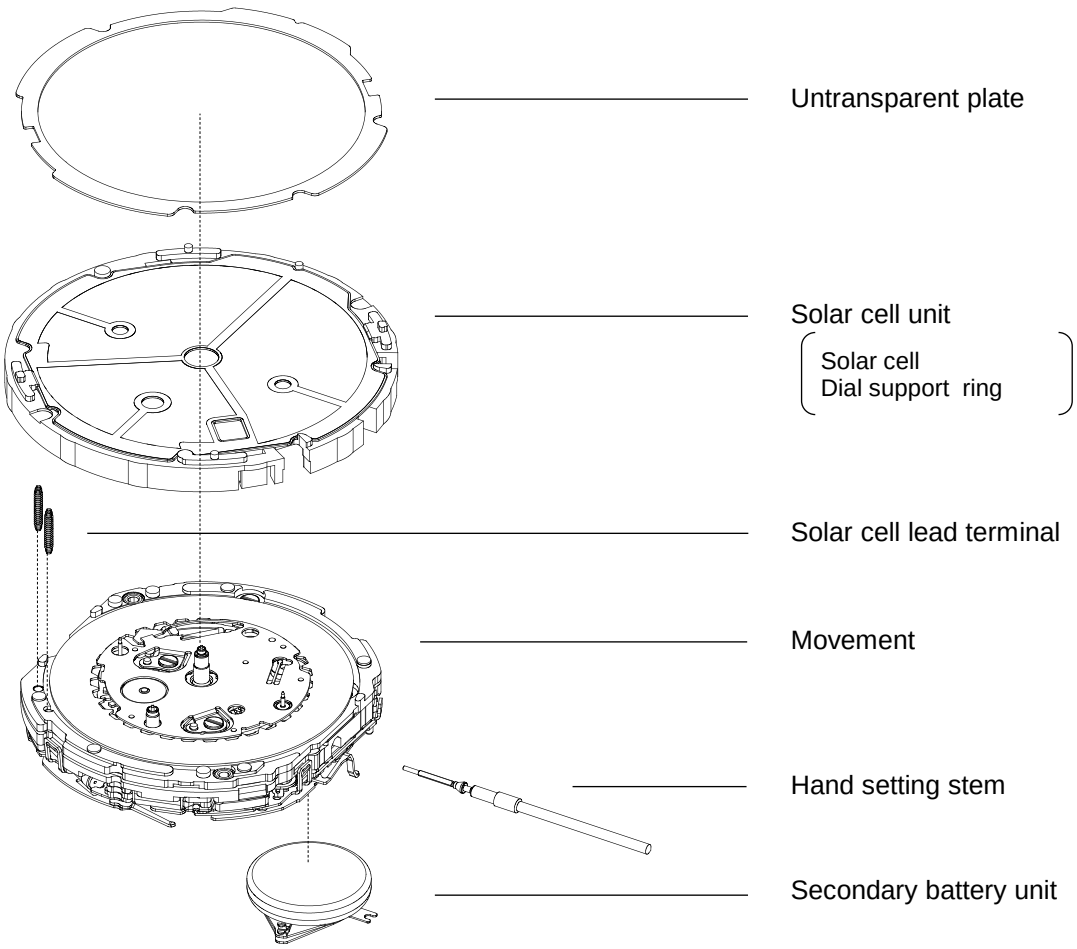

Cal. VS75B	Specifications	Date : 4/Aug./'23 Rev. : 02

Solar Analog Quartz 12''' Center Second Chronograph Movement

1. MOVEMENT DIMENSIONS

Outside diameter	φ27.60mm(12H-6H) × 24.00mm(3H-9H)
Casing diameter	φ27.00mm(12H-6H)
Total height	4.4mm

2. TIME STANDARD

Type of quartz oscillator	Tuning fork
Frequency of quartz oscillator	32,768 Hz
Accuracy	±20 seconds per month (on wrist)
Operating temperature range	−5℃ to +50℃
Regulation device	Nil (Pre-adjusted)

3. INDICATOR / FUNCTIONS

3 Hands	Hour / Minute / 1/5 second chronograph (Center)
Small hands	Small second (9H) / Minute chronograph (6H) / 24 Hour (3H)
Calendar	Instant setting device for date calendar
Reset switch	
Power depletion warning function (BLD)	
(Second hand moves at 2-second intervals when voltage is 1.2V)	
Chronograph	The chronograph can measure up to 60 minutes in 1/5 second increments.
Running time	Approx. 6 months (After fully charged)

4. FEATURES

Jewels	0 Jewels	
Anti-magnetism	Over 1600A/m (Direct current magnetic field)	
Driving current consumption	Approx. 0.65μA (1.35V , Chronograph non-operates)	
Operation stopping voltage	1.0V	
Solar cell type	Amorphous silicon solar cell	
Maximum unbalance of hands	Small second hand	: 0.03μN･m
	Minute chronograph hand	: 0.03μN･m
	24 huor hand	: 0.03μN･m
	1/5 second chronograph hand	: 0.09μN･m
	Minute hand	: 0.70μN･m
Moment of inertia	1/5 second chronograph hand	: less than 0.12μg･m²

5. SECONDARY BATTERY

Type	Lithium metal batteries
Size	φ9.5 × t 2.05 mm
Capacity	5.5mAh
Nominal voltage	1.5V

6. SEPARATED PARTS (Parts code)

Hand setting stem	0351587
Secondary battery unit	302334T
Solar cell unit	4020552
Solar cell lead terminal (2 pcs)	4281516
Untransparent plate	4453500

7. TEST OF ACCURACY

Equipment to be used	SEIKO quartz tester QT-99
	Greiner quartz timer-C , Witschi Q-tester 4000
Duration of measurement	10 seconds
Microphone to be used	Electromagnetic detection type

All specifications are subject to change without notice.

Cal. VS75B	Appearance	Date:31/Jan./'18
		Rev.:00

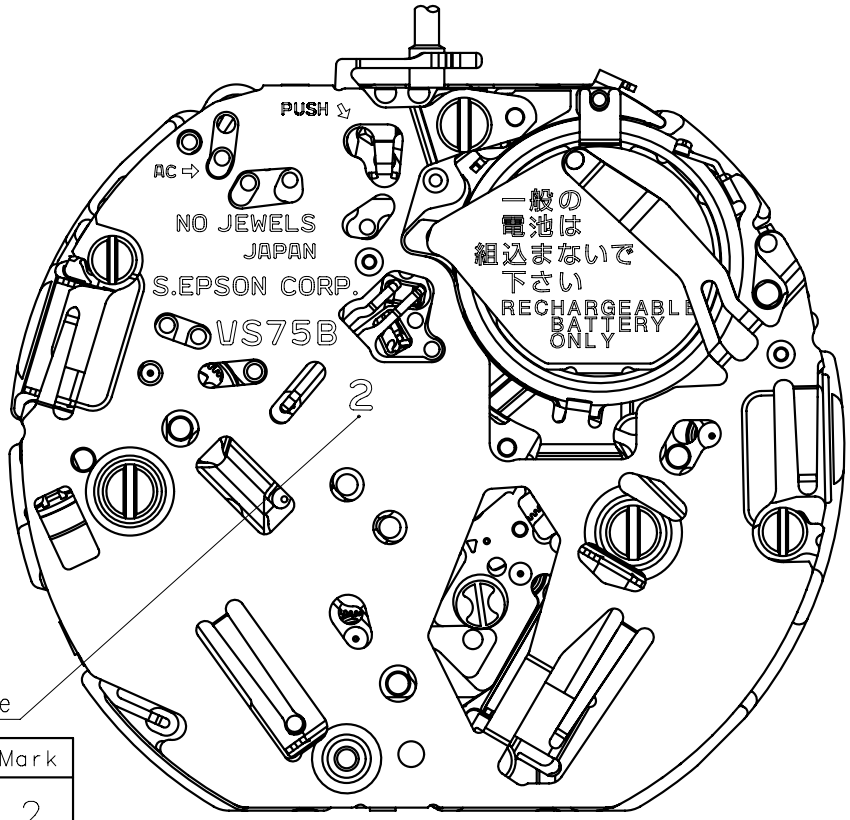

Hands type

	Mark
Type(M)	2

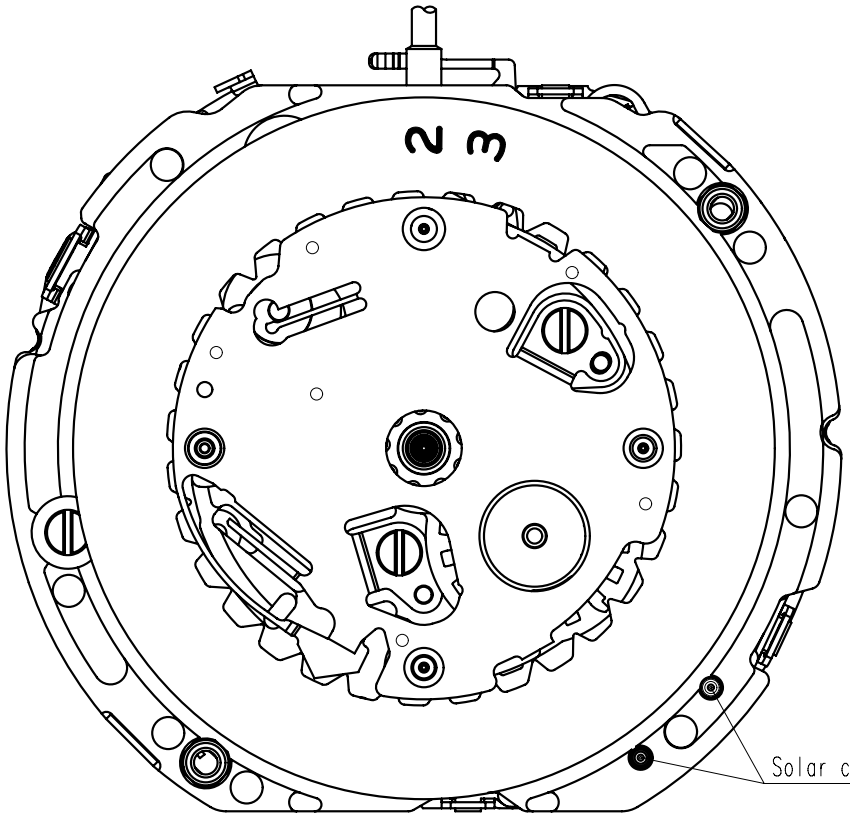

Solar cell lead terminal

Cal. VS75B	Casing	Date:31/Jan./'18
		Rev.:00

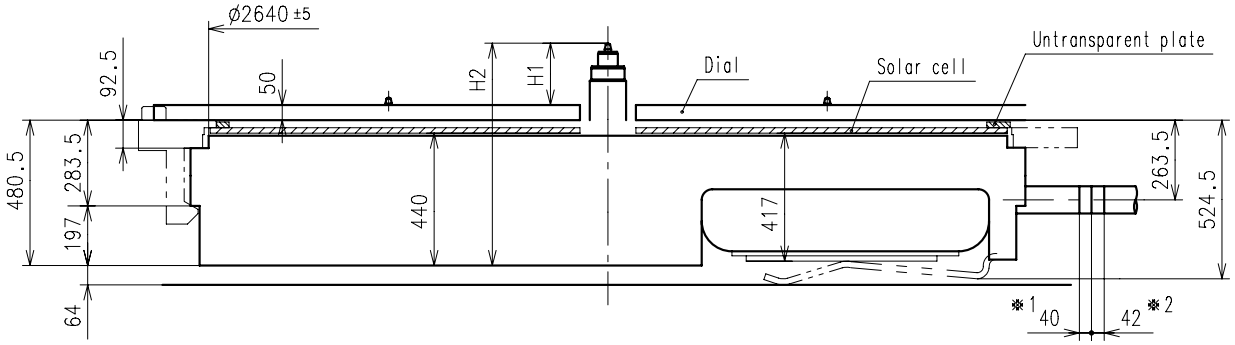

※1:First pullout stroke
※2:Second pullout stroke

Center post		Type M (2) VS75B**
Maximum height from dial	H1	195.5
Total height including movement	H2	726

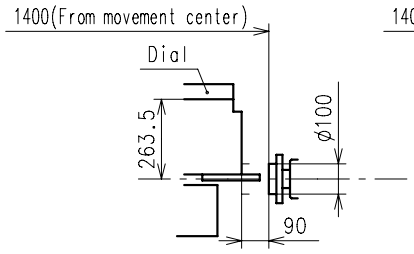

4H Button stroke

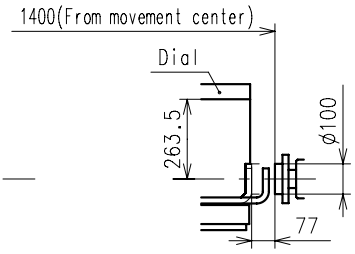

2H Button stroke

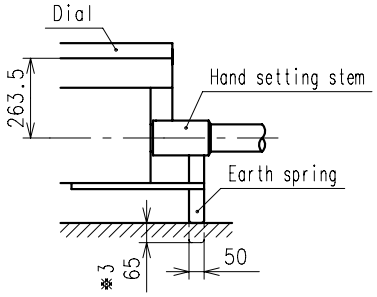

※3:The earth spring is absolutely placed in contact with the case back.

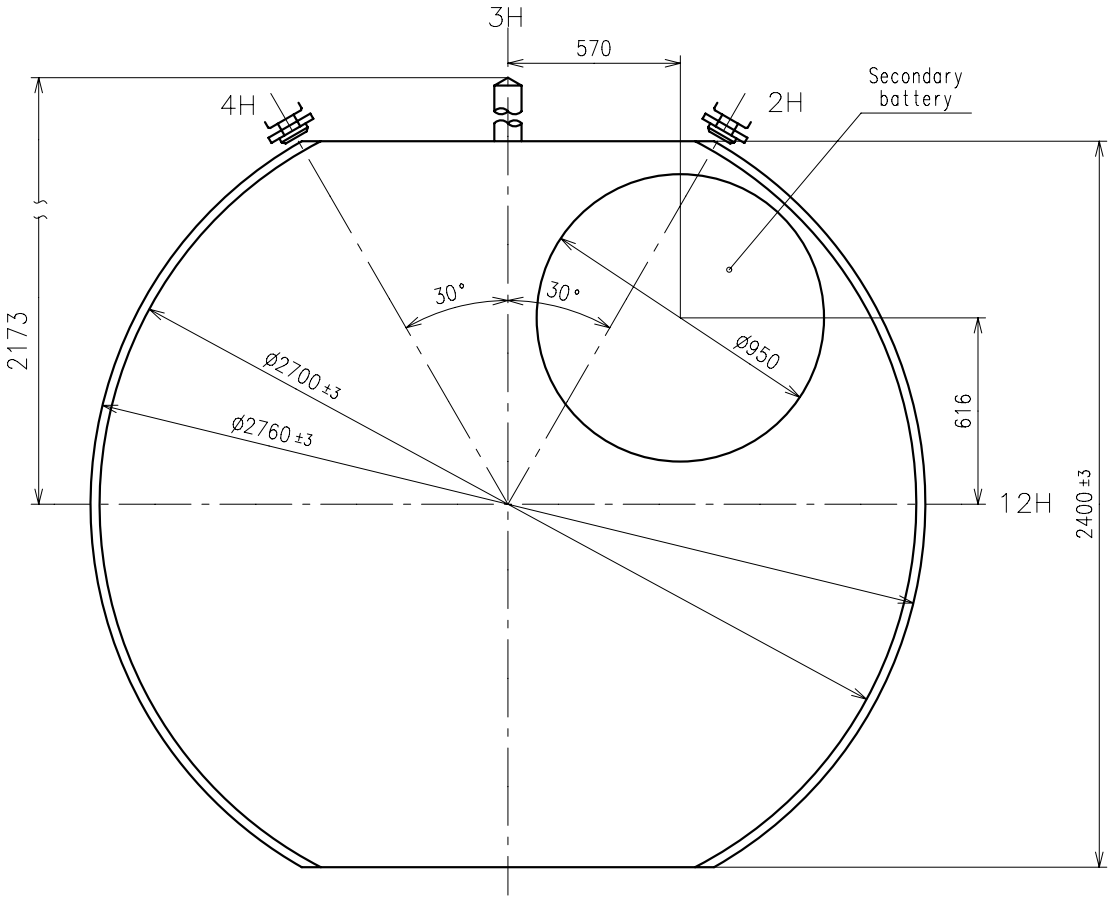

Unit : 1=1/100mm

Cal. VS75B	Hand fitting	Date:11/Jan./'19 Rev.:01

※Unbalance
- Small second hand ≦ 0.03μ N・m (3μ g・m)
- Minute chronograph hand ≦ 0.03μ N・m (3μ g・m)
- 1/5 second chronograph hand ≦ 0.09μ N・m (9μ g・m)
- Minute hand ≦ 0.70μ N・m (70μ g・m)
- 24 hour hand ≦ 0.03μ N・m (3μ g・m)

※Moment of inertia
- 1/5 second chronograph hand ≦ 0.12μ g・m²

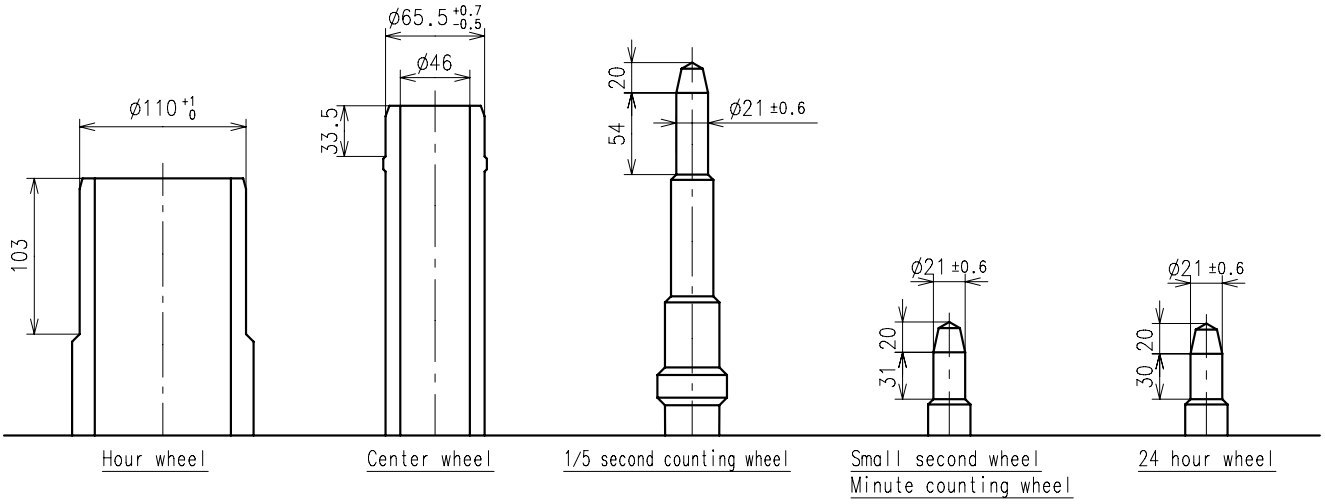

	Parts No.					
	Hour wheel	Center wheel	1/5 second counting wheel	Small second wheel	Minute counting wheel	24 hour wheel
Type M (2) VS75B**	0271636	0221604	0888501	0240511	0902500	1002534

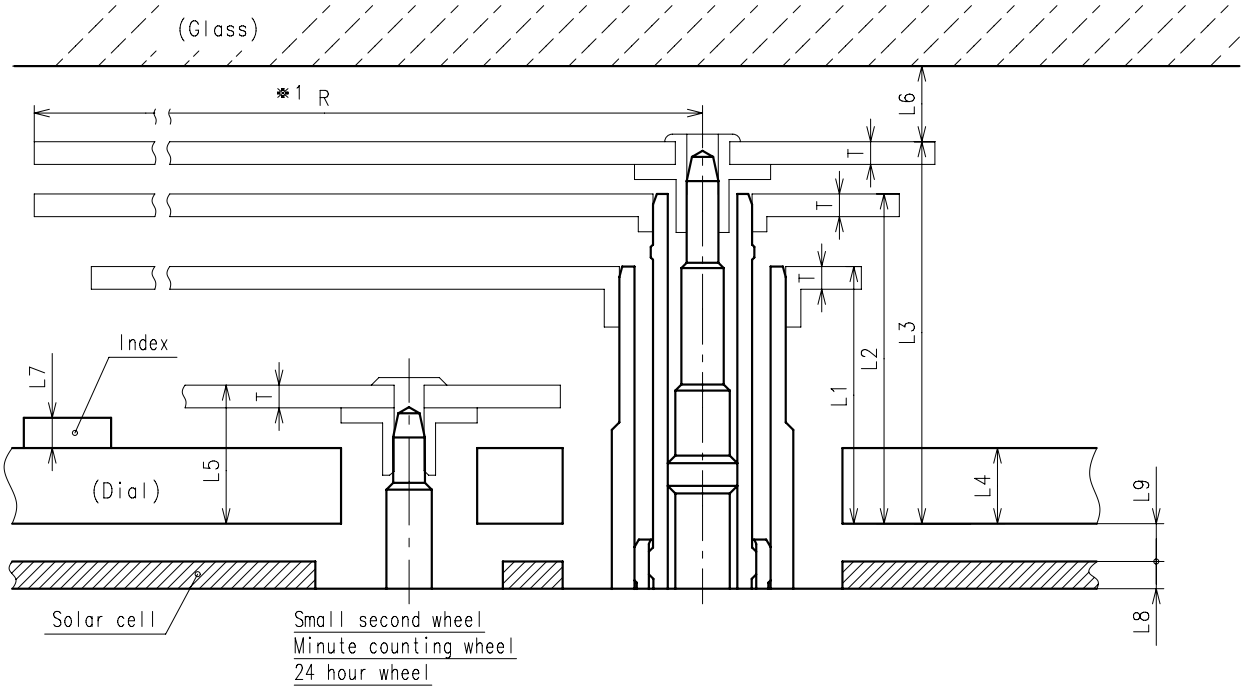

	L1	L2	L3	L4	L5	L6	L7	L8	L9	T	※1 R
Type M (2) VS75B**	178	226	261	50	90	MIN: 50	MAX: 50	18	20	15	MAX: 1250

※1:It is the size taken into consideration for hands attachment.
Please observe some standard value specified in unbalance and moment of inertia when using long hands.

Unit : 1=1/100mm

Cal. VS75B	Hand setting stem	Date:31/Jan./'18 Rev.:00

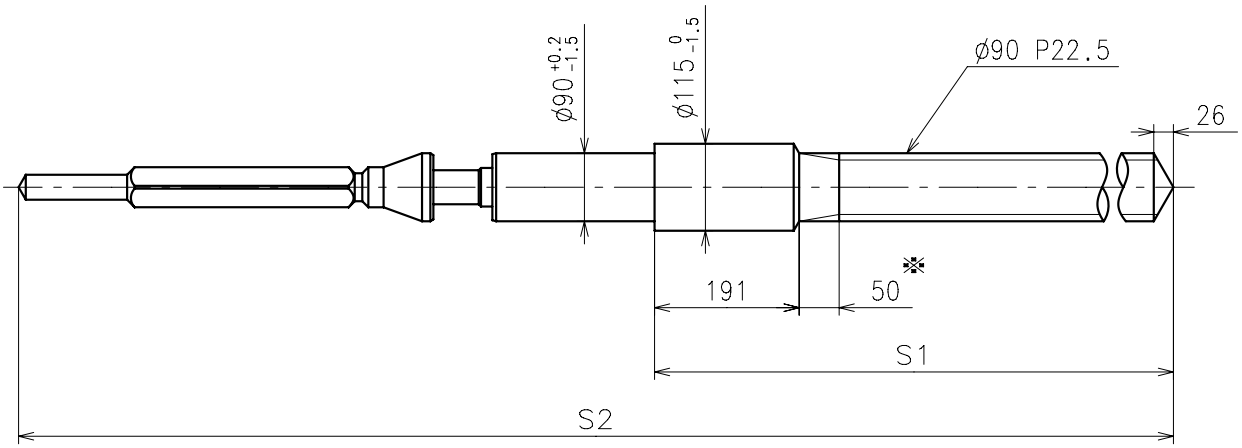

※ Not threaded

	Part No.	S1	S2
Standard	0351587	1367	2208

Material : Steel

Hardness : Vickers 600±50

Unit : 1=1/100mm

Cal. VS75B	Dial	Date: 4/Aug./'23
		Rev.:01

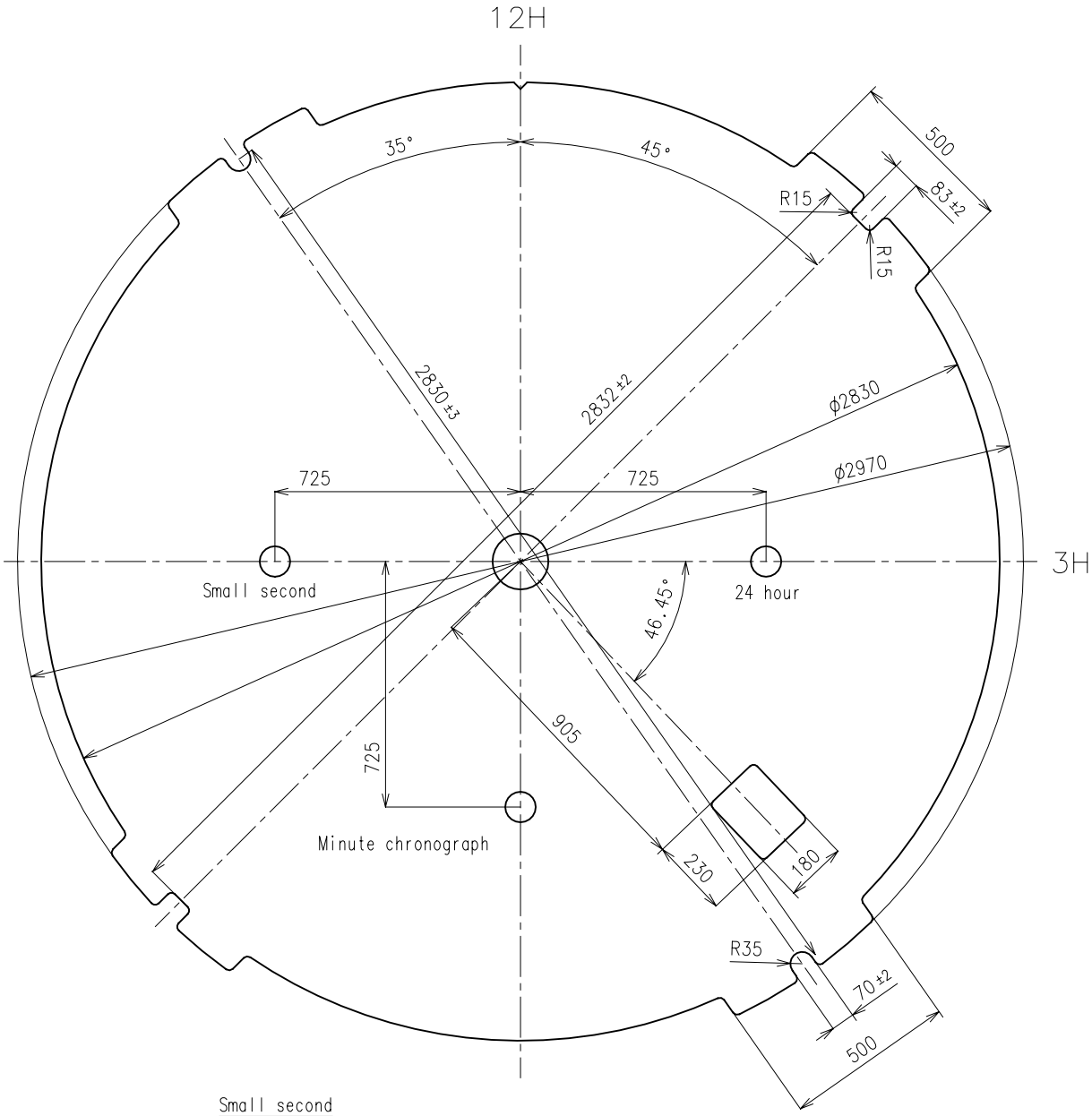

Small second
Minute chronograph
24 hour

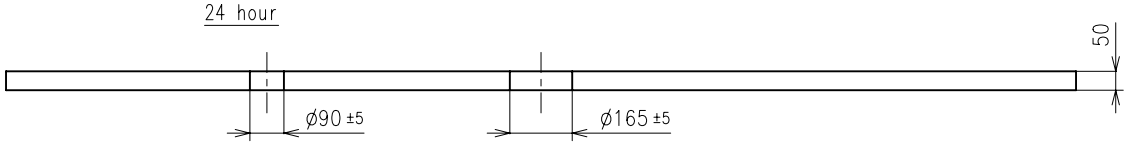

[Attention]
Each elements of solar cell must be kept the transparency rate of the dial more than 20%.
Refer to the Fig.[1] or [Solar cell unit] page instruction as to the shape of solar cell.

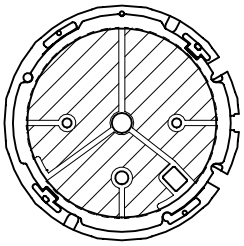

Fig.[1] elements of solar cell

Cal. VS75B	Solar cell unit	Date: 1/Dec./'23
		Rev.:01

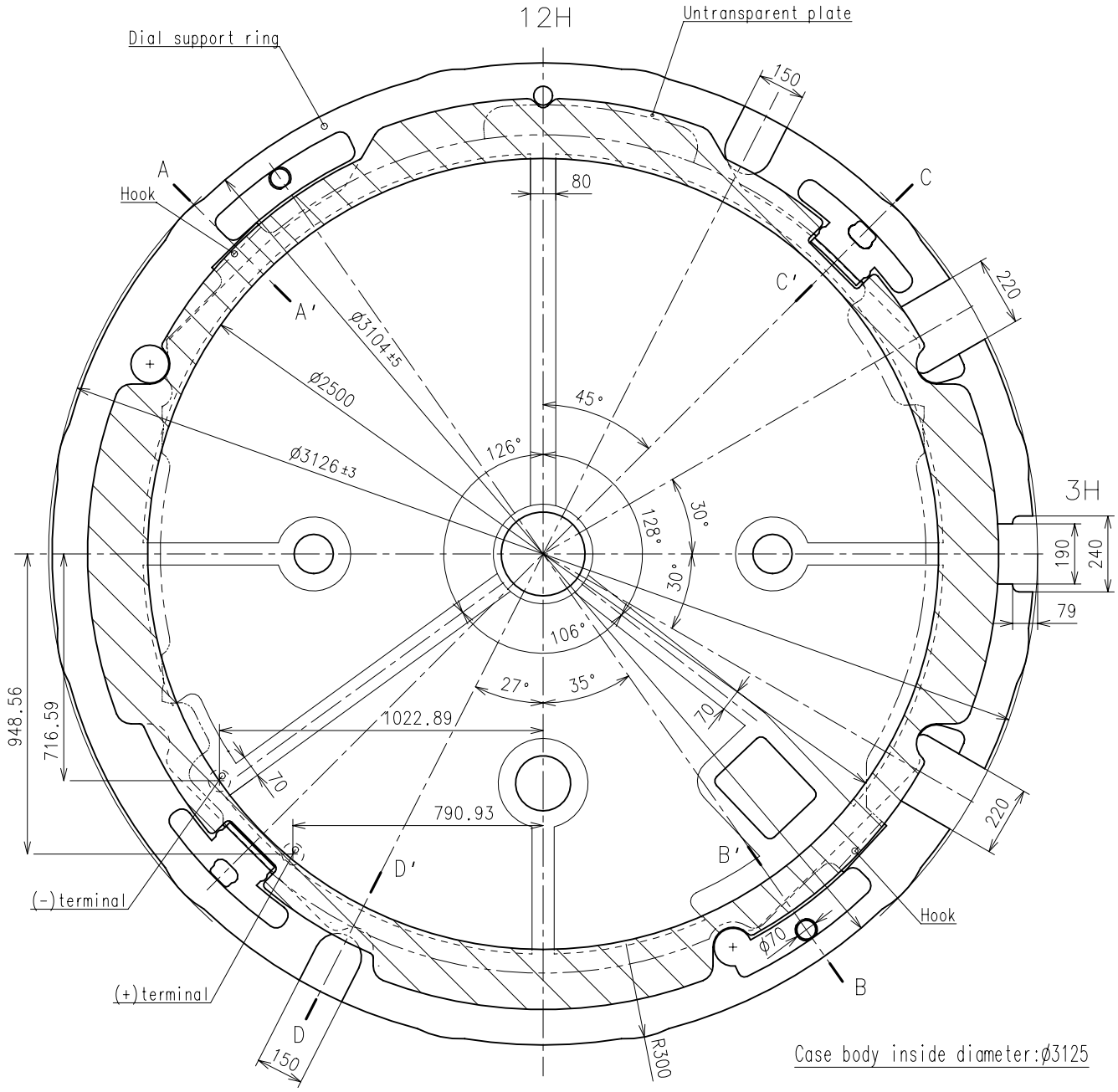

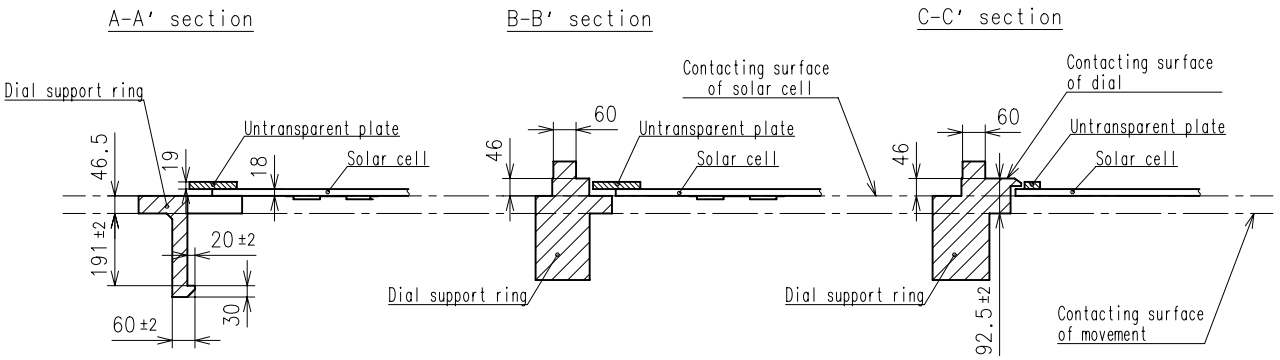

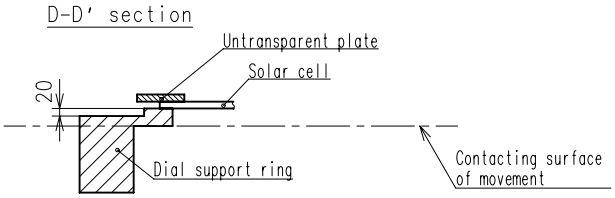

Unit : 1=1/100mm

Cal. VS75B	Attention-01	Date : 4/Aug./'23 Rev. : 03

1. Attention for solar cell unit

Pay attention not to touch and scratch the surface of the solar cell.

2. Dial transparency rate

Keep the transparency rate of the dial more than 20%.
(Effective aperture is ϕ27mm)
Each elements of solar cell must be kept the transparency rate.

3. The guideline of charging time is as in below

Illumination (Lx)	Source of light	Environment	Dial transparency rate = 20% A (Approx. Hours)	B (Approx. Hours)	C (Approx. Minutes)	Dial transparency rate = 30% A (Approx. Hours)	B (Approx. Hours)	C (Approx. Minutes)
700	A fluorescent lamp	Inside the office	–	48	123	-	35	90
3,000		30W 20cm	90	11	28	65	8	20
10,000	Sun light	Cloudy	24	2.9	8	18	2.5	6
100,000		Fine weather	5	1.2	3	5	1	2

Condition A : Time required for full charge
Condition B : Time required for steady operation
Condition C : Time to charge 1 day of power

4. How to set the secondary battery unit

- Please set the exclusive secondary battery unit.
  (The secondary battery is Lithium metal batteries without any environmentally harmful substances.)
- Please install the plus part of the secondary battery towards inside of the watch.
- When installing or changing the secondary battery unit, it is recommended to remove three secondary battery clamp screws first, then remove the secondary battery clamp not to damage the movement parts.
  If you install the secondary battery unit without removing the secondary battery clamp, please install the secondary battery unit from [→] direction as illustrated below Fig.[1].
- Secondary battery unit guide must be connected to "Guide pole". (Refer to the Fig.[1] in below.)
- Check whether the secondary battery lead plate is surely connected to the secondary battery minus pattern.
- Install the secondary battery unit under the circuit block cover as illustrated below Fig.[1] and

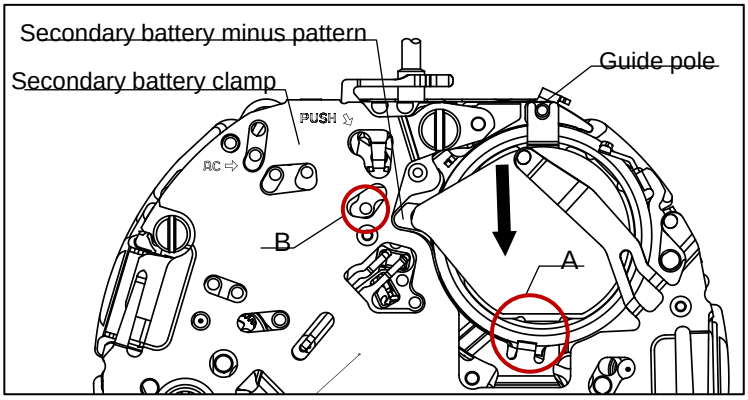

Fig.[1]

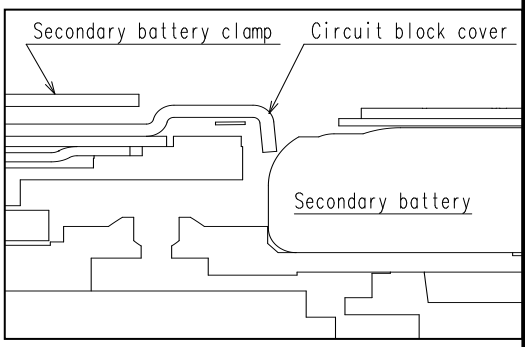

Fig.[2] A section

⚠ 5. To do system reset

- System-reset and adjusting the polarity of each step rotors is required as below after installing secondary battery unit.
  Short the circuit pattern “AC” to the secondary battery clamp for more than 2 seconds.
  Short the circuit pattern “B” to the secondary battery clamp for more than 2 seconds at 2nd click.

6. How to remove the setting stem

- When removing the setting stem, pull out the crown at 1st click position and then remove the setting stem while pressing the hollow portion of setting lever by tweezers. (Refer to the Fig.[3].)
- Please do not transform the earth spring.

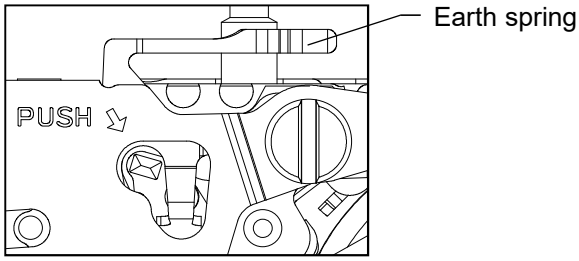

Fig.[3] Crown pulled out at 1st click

7. Attention of casing part structure

- Use the specified dial support ring to prevent rotation of the movement inside of the case in order to stabilize the button operation.
  Refer to the [Solar cell unit] page instruction as to the shape and tolerance.
- Use the metal case to prevent from the movement mal-function by static electricity.
- The center wheel have a safety stopper structure to prevent the minute hand from being pressed too much. However pay attention to the contact between hour hand and minute hand.

8.How to set the hands

- Each hand moves at step interval. Set the each hand at correct position according to the scale on the dial in order not to make a mistake in reading time.
- Do not turn the hand forcibly.

9.How to remove the hands

- When removing the hands, use exclusive fork-shaped tools.
- Do not remove the dial under the condition that any hands are set.

10. Caution

When charging the watch, do not place it too close to fluorescent lamp or other light sources as the watch temperature will become extremely high, causing damage to the parts inside the watch.

11. How to set the solar cell lead terminal

Please set 2pcs of solar cell lead terminals in accordance with this illustration.
As to the solar cell lead terminal shape, there is no distinction between upper and lower.

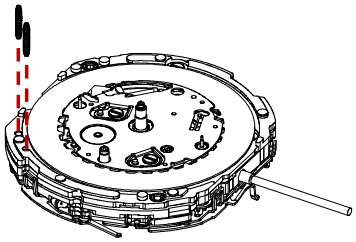

12. How to set the solar cell unit

Push above part of each hook on the solar cell unit into main plate certainly.

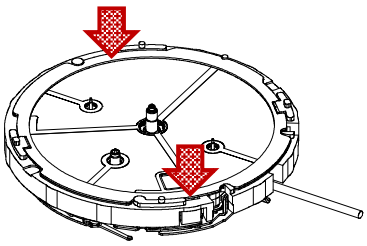

13.How to set the dial

The dial is held by the four guide poles on the solar cell unit.

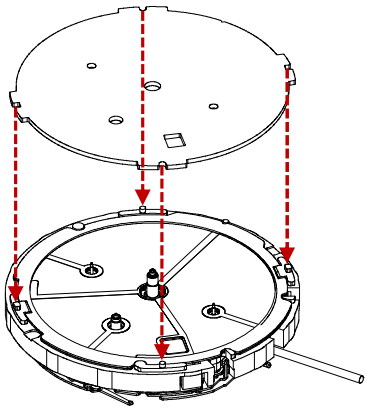

14.System reset as complete watch

System-reset(Refer to Operation-01[*1].) is required in case of below,

— after replacement of secondary battery unit.

— malfunction or abnormal operation when an error occurs

※It is necessary to set the "0" position after system-reset, because "0" position of small hands may slip off.

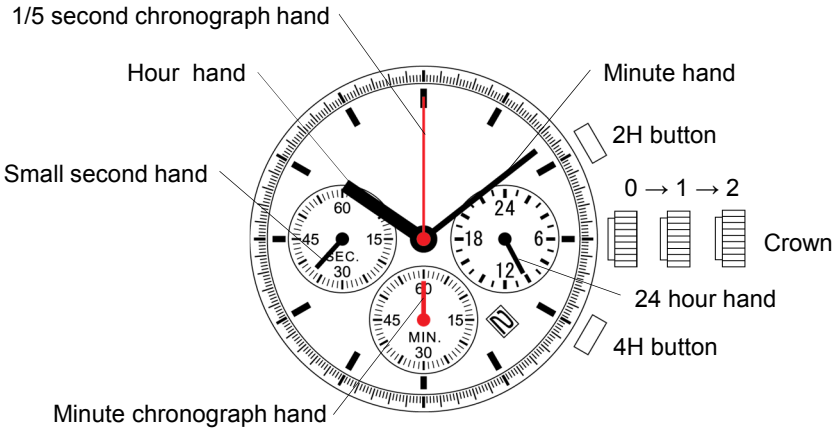

	Crown position		
	0 click	1st click	2nd click
Crown	Free	Turn clockwise for date change	Time setting
2H button	Chronograph Start/Stop Restart	Chronograph Start/Stop Restart	[*1]
4H button	Chronograph Reset Split Split release	Chronograph Reset Split Split release	[*1]

[*1] How to set the "0" position / System-reset (Crown position : 2nd click)

How to set the "0" position.

Pull crown out to the 2nd click position.

↓

Press 2H button for 2 seconds.

Minute chronograph hand turns a full round and can now be set to correct "0" position.

↓

Press 4H button repeatedly to set it to "0" position.

↓

Press 2H button for 2 seconds.

1/5 second chronograph hand turns a full round and can now be set to correct "0" position.

↓

Press 4H button repeatedly to set it to "0" position.

Press 2H button for 2 seconds here will allow you to resume the procedure again as indicated by the arrow if necessary.

↓

Push crown back to normal position.

System-reset

Pull crown out to the 2nd click position.

↓

Press 2H and 4H buttons at the same time for longer than 2 seconds.

It is necessary to set the "0" position after system-reset.

Chronograph function

- The chronograph can measure up to 60 minutes in 1/5 second increments.
- When the measurement reaches 60 minutes, the chronograph automatically stops counting.

■ Standard measurement

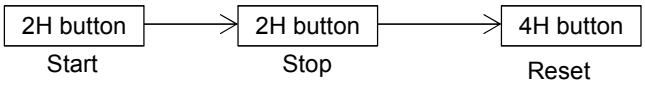

■ Accumulated elapsed time measurement

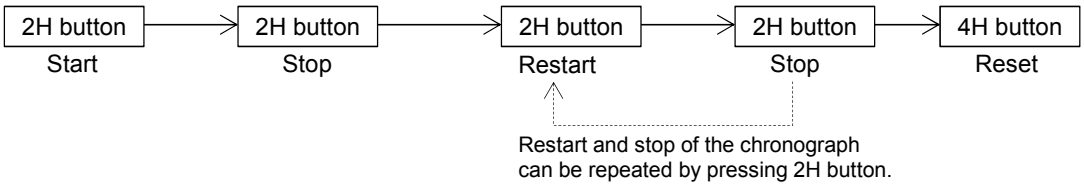
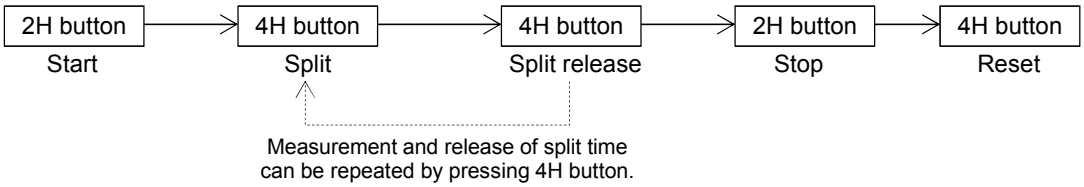
■ Split time measurement